WBD1
WashBar® Duo

Key Features

- Chrome plated cast alloy WashBar® Duo includes touch-free soap and water
- WashBar technology intuitively guides user and eliminates simultaneous activations
- Available with foam or liquid soap
- WashBar Duo comes complete with supply hoses and soap dispenser components
- Available in polished chrome or with optional in-stock PVD finishes

Specifications

The single piece WashBar Duo allows users to access soap and water without leaving the hand washing station. The unit handles washroom traffic quickly and economically, while providing each user with personal space.

Product Compliance

Listed by IAPMO R&T to

- Uniform Plumbing Code (UPC)
- National Plumbing Code of Canada
- International Plumbing Code (IPC)
- IGC 127 (WashBar)

Complies with

- ADA
- ICC/ANSI 117.1
- NSF/ANSI 372

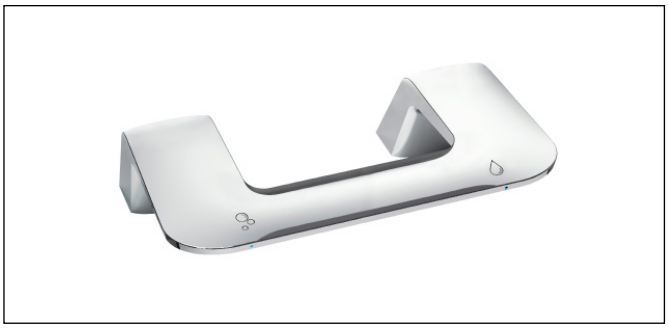

Finishes

Click on any color swatch to view as a larger image.

- Polished Chrome
- Brushed Black Stainless*
- Brushed Stainless*
- Brushed Bronze*
- Brushed Brass*
- Brushed Nickel*

*PVD Finishes, see PVD Finishes section on page 2.

Compatible Bradley Products

- LVA Series
- LD-3010

Serves the American Disabilities Act and ICC/ANSI 117.1 guidelines, citations 306, 308, 309.4, 606.4, 606.5 when installed according to these requirements.

Consult local codes and standards. Conformity and compliance to local and national codes is the responsibility of the installer.

Verify all rough-in dimensions prior to installation.

This plumbing fixture is designed for hand washing only. It is not Intended to dispense water for human consumption through drinking or for preparation of food or beverages.

This information is subject to change without notice.

© 2024 Bradley
P.O. Box 309, Menomonee Falls, WI 53052-0309
800 BRADLEY (800 272 3539) +1 262 251 6000
bradleycorp.com

Construction

WashBar Duo

WashBar Duo includes touch-free soap and water. Load tested to 500 pounds, WashBar Duo is secured to the basin with two anti-rotational shanks. Blue LED lights help guide the user to WashBar Duo, indicating the functions. The LED light will change from blue to green to signify that the function is in use. Each function is easily identified by the corresponding icon on WashBar Duo's top surface.

Each sensor includes a turn-off delay of 1-2 seconds to aid in a smooth, controlled hand-washing and drying operation. WashBar Duo sensors are not affected by varying skin tones or darkness. Smart technology allows the facilities manager or maintenance staff to clean and configure with ease.

Cleaning Mode

WashBar Duo has an activation feature to put the unit into cleaning mode to allow for easy cleaning of WashBar Duo and the basin without activating the functions.

Configuration Mode

Configuration mode easily allows the system light brightness and soap type to be changed.

Soap Dispenser

The soap dispenser is located on the left side of the WashBar Duo, eliminating any soap from dripping on counters or onto the floor, minimizing slip hazards and allows for easy cleaning. Choose between a foam or liquid soap dispenser, which are compatible with most bulk soaps. Soap system accommodates up to a 1 gallon container to reduce the number of soap replacements. When the LED light above the soap function turns to solid red, simply reset the soap counter and then check the level and replace the soap container with a full container if necessary. The soap system includes an adapter to fit many 1 gallon soap containers available on the market.

Please visit https://www.bradleycorp.com/maintenance/soap-dispensers for soap recommendations.

Faucet

Faucet is located on the right side of WashBar Duo and has a spray angle of approximately 17 degrees off the vertical. Comes standard with a 0.5 gpm (1.90 Lpm), 0.09 gpc (0.35 Lpc), or 0.35gpm (1.30 Lpm), 0.05 gpc (0.25 Lpc) PCA silicone tip, non-aerated spray pattern with a maximum run time of 11 seconds per activation. Automatic 5 second purge within 24 hours of the last use. The recommended operating range is 20-80 psi.

Electrical

Each WashBar Duo is powered by one 120V, 2A, 12VDC adapter that plugs directly into the electrical outlet.

* PVD Finishes

Physical Vapor Deposition is an intricate, environmentally friendly finishing process that molecularly bonds the finish to the faucet, creating a very hard, durable surface that will not corrode, discolor, or tarnish.

Models (Must select one)

Model	Description
◯ WBD1	WashBar Duo

Standard Selections (Must select one from each category)

Country of Installation (select one)

◯ C1	United States or Canada

Soap Type (select one)

◯ F	Foam Soap Dispenser - 1 gallon soap container by others
◯ L	Liquid Soap Dispenser - 1 gallon soap container by others

Soap Fill Type (select one)

◯ BI	Below Fill (individual, includes 1 gallon (3.72 L) container)

Water Supply Type (select one)

◯ T	Thermostatic Mixing Assembly (supply hoses and shut-offs included)
◯ L	Single Tempered Line Assembly (supply hoses and shuf-offs included)

Flow Control Type* (select one)

◯ 3	0.35 gpm (1.30 Lpm) Silicone Tip, Multiple Individual Laminar Flow Streams
◯ 5	0.50 gpm (1.90 Lpm) Silicone Tip, Multiple Individual Laminar Flow Streams

Finish Type* (select one)

◯ PC	Polished Chrome
◯ BB	Brushed Black Stainless
◯ BS	Brushed Stainless
◯ BZ	Brushed Bronze
◯ BR	Brushed Brass
◯ BN	Brushed Nickel

Trench drain cap will always have a stainless steel finish.

This information is subject to change without notice.

© 2024 Bradley
P.O. Box 309, Menomonee Falls, WI 53052-0309
800 BRADLEY (800 272 3539) +1 262 251 6000
bradleycorp.com

Dimensions - Customer Supplied Countertop with WashBar Duo (mm)

Top View

1-Station shown.
Other configurations are similar.

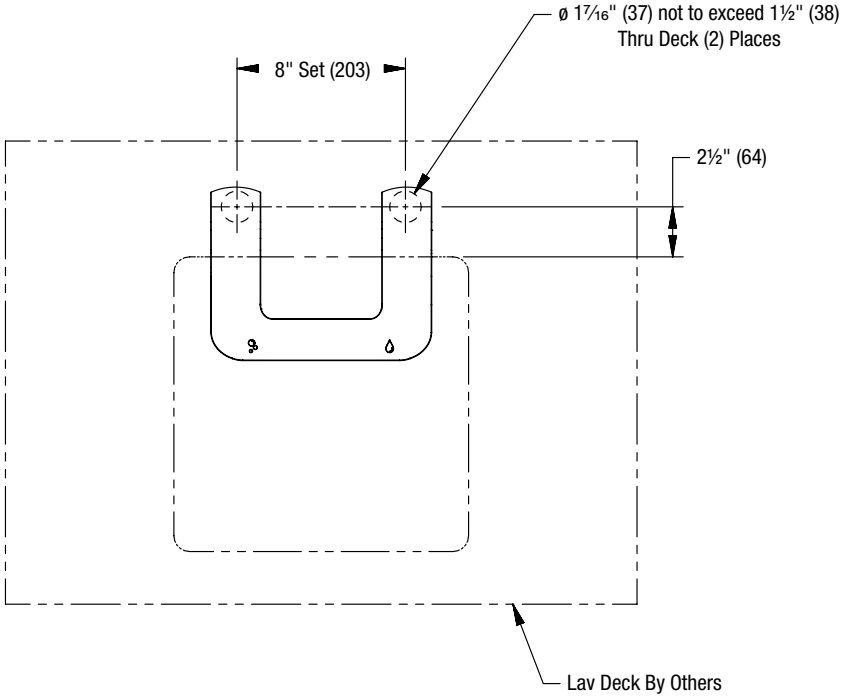

Front View

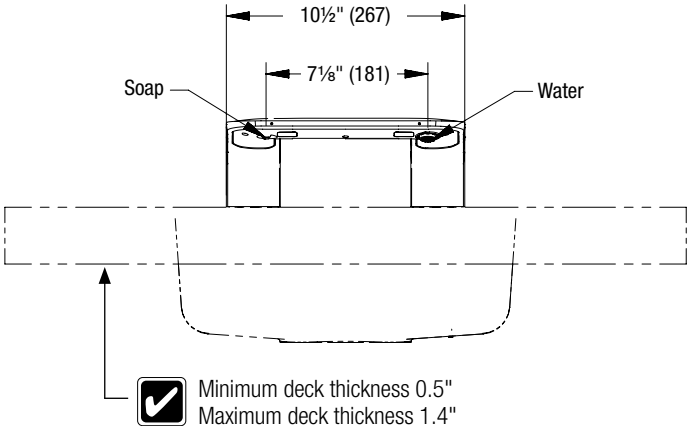

Side View

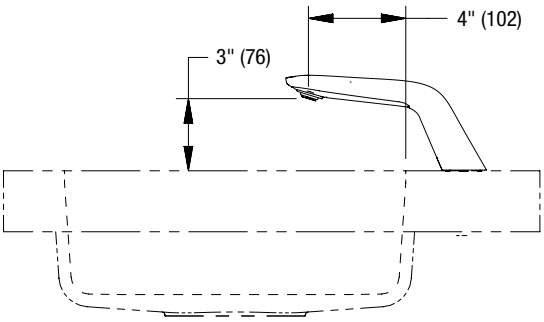

This information is subject to change without notice.

© 2024 Bradley
P.O. Box 309, Menomonee Falls, WI 53052-0309
800 BRADLEY (800 272 3539) +1 262 251 6000
bradleycorp.com

Dimensions - Verge LVA-Series with WBD1 (mm)

Top View

1-Station shown.
Other configurations are similar.

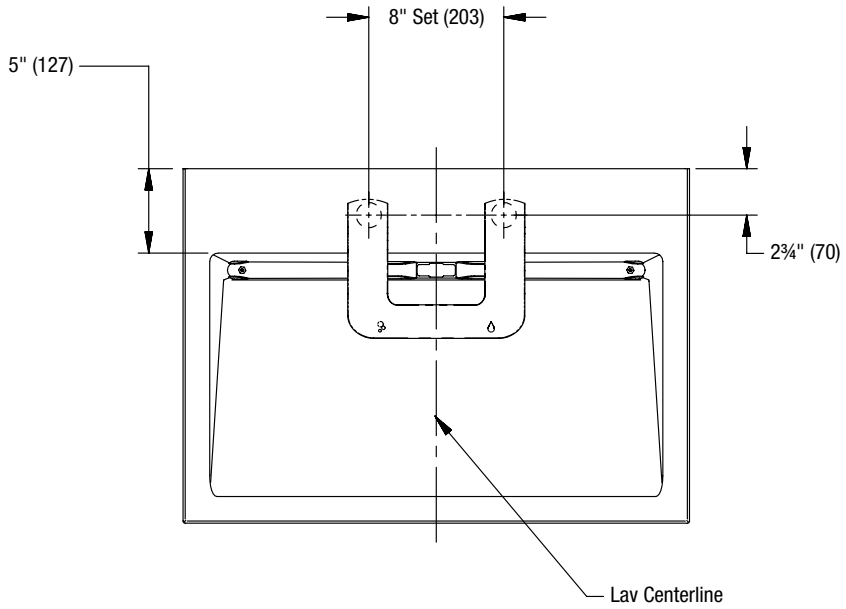

Front View

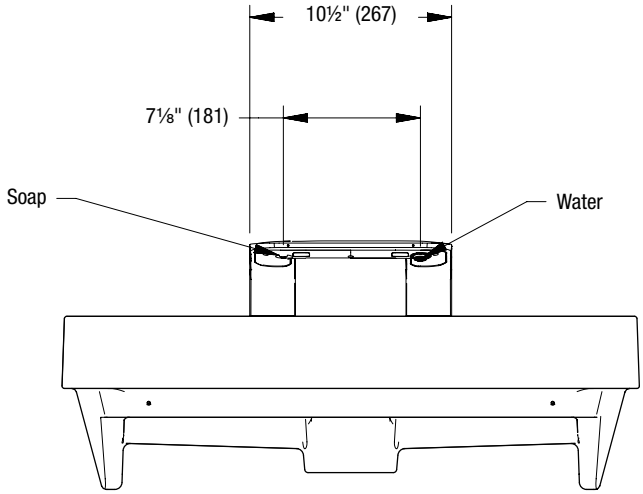

Side View

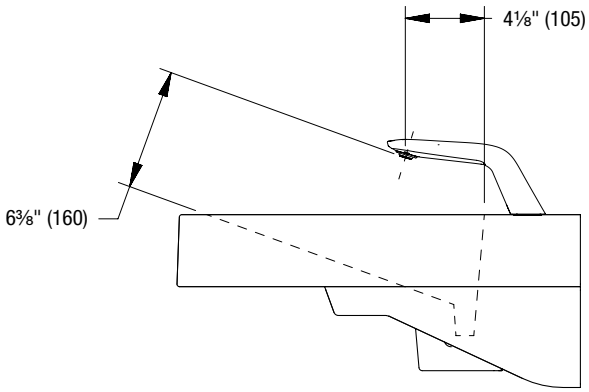

© 2024 Bradley
P.O. Box 309, Menomonee Falls, WI 53052-0309
800 BRADLEY (800 272 3539) +1 262 251 6000
bradleycorp.com
This information is subject to change without notice.

Dimensions - Verge LVA-Series with WBD1 (mm)

Side View with Soap

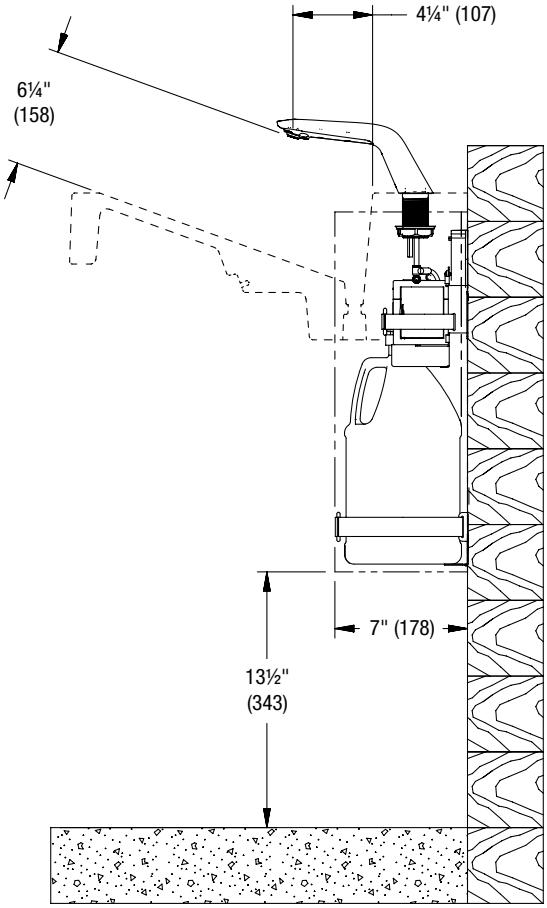

© 2024 Bradley
P.O. Box 309, Menomonee Falls, WI 53052-0309
800 BRADLEY (800 272 3539) +1 262 251 6000
bradleycorp.com
This information is subject to change without notice.

Dimensions - LD-3010 with WBD1 (mm)

Top View

1-Station shown.
Other configurations are similar.

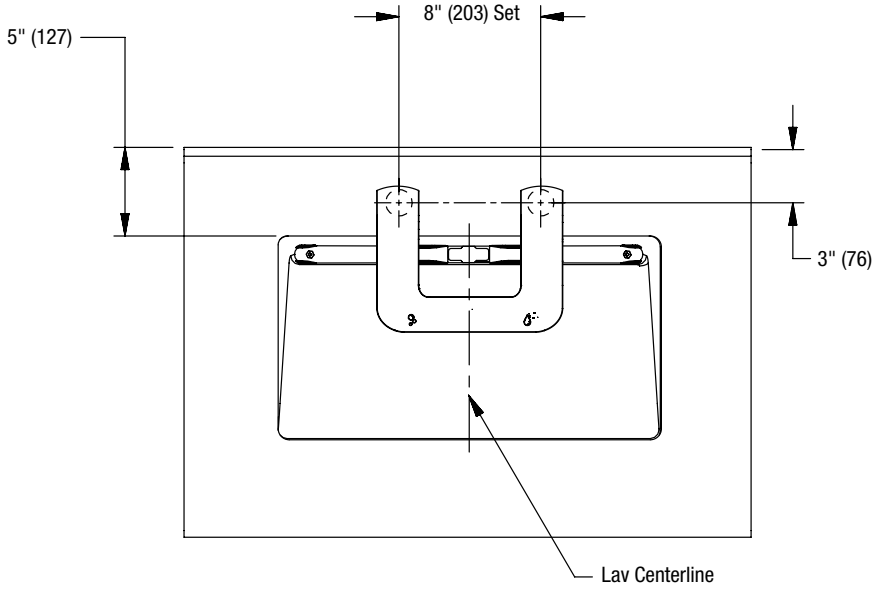

Front View

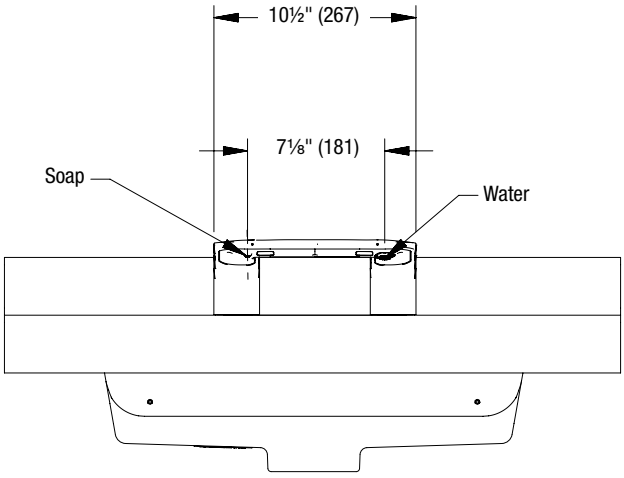

Side View

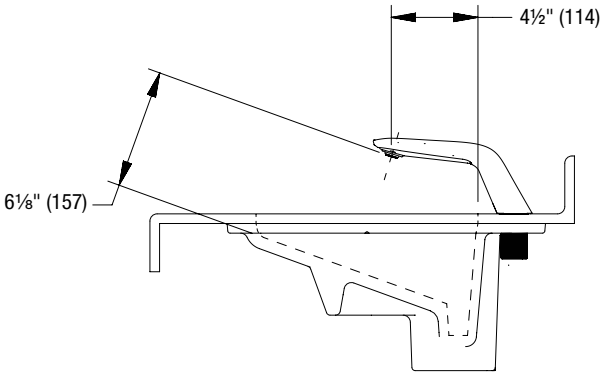

© 2024 Bradley
P.O. Box 309, Menomonee Falls, WI 53052-0309
800 BRADLEY (800 272 3539) +1 262 251 6000
bradleycorp.com
This information is subject to change without notice.

Structural Rough-Ins for WashBar Duo (mm)

Standard ADA height shown. Add or subtract for other accessibility guidelines.

Typical rough-ins for single bowl shown. Other multiple-bowl rough-ins are similar.

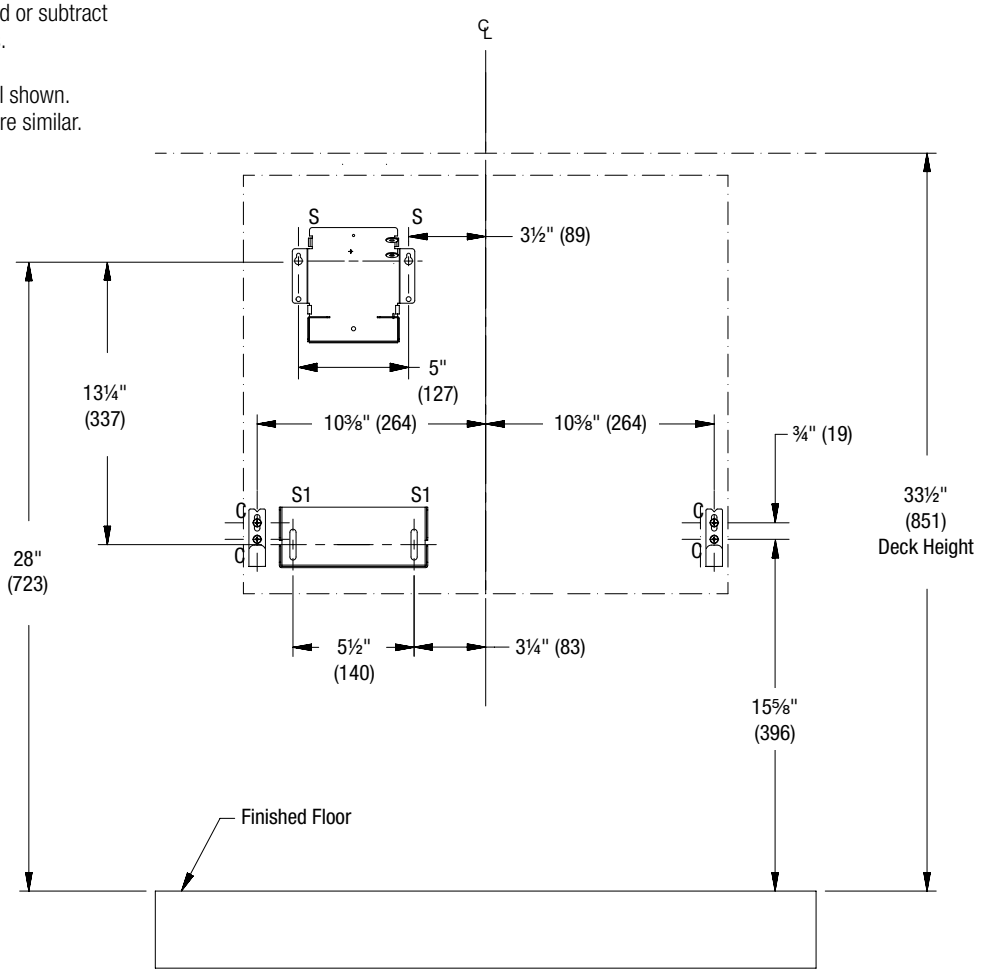

CODE	DESCRIPTION	QTY.
C*	Install wall anchor with a minimum pull-out force of 100 lb per local codes at locations shown	4
S	#10 Wall anchors for soap control box bracket	4
S1	#10 Wall anchors for soap tank bracket (100 lb pull out force)	4

* "C" rough-ins for access panel brackets are not needed for customer supplied countertop.

RIM HEIGHT	VERTICAL HEIGHT ADJUSTMENTS	FIXTURE STYLE
34"	No Adjustment	Standard Height ADA and TAS
31	Subtract 3"	Juvenile, ADA and TAS
33 1/16"	Subtract 15/16"	OBC
34 1/16"	Add 1/16"	BCBC and QBC
33⅞"	Subtract 1/8"	CSA

* See installation instructions for more detailed information.

© 2024 Bradley

P.O. Box 309, Menomonee Falls, WI 53052-0309
800 BRADLEY (800 272 3539) +1 262 251 6000
bradleycorp.com

Plumbing and Electrical Rough-Ins for WashBar Duo (mm)

Standard ADA height shown. Add or subtract for other accessibility guidelines.

Typical rough-ins for single bowl shown. Other multiple-bowl rough-ins are similar.

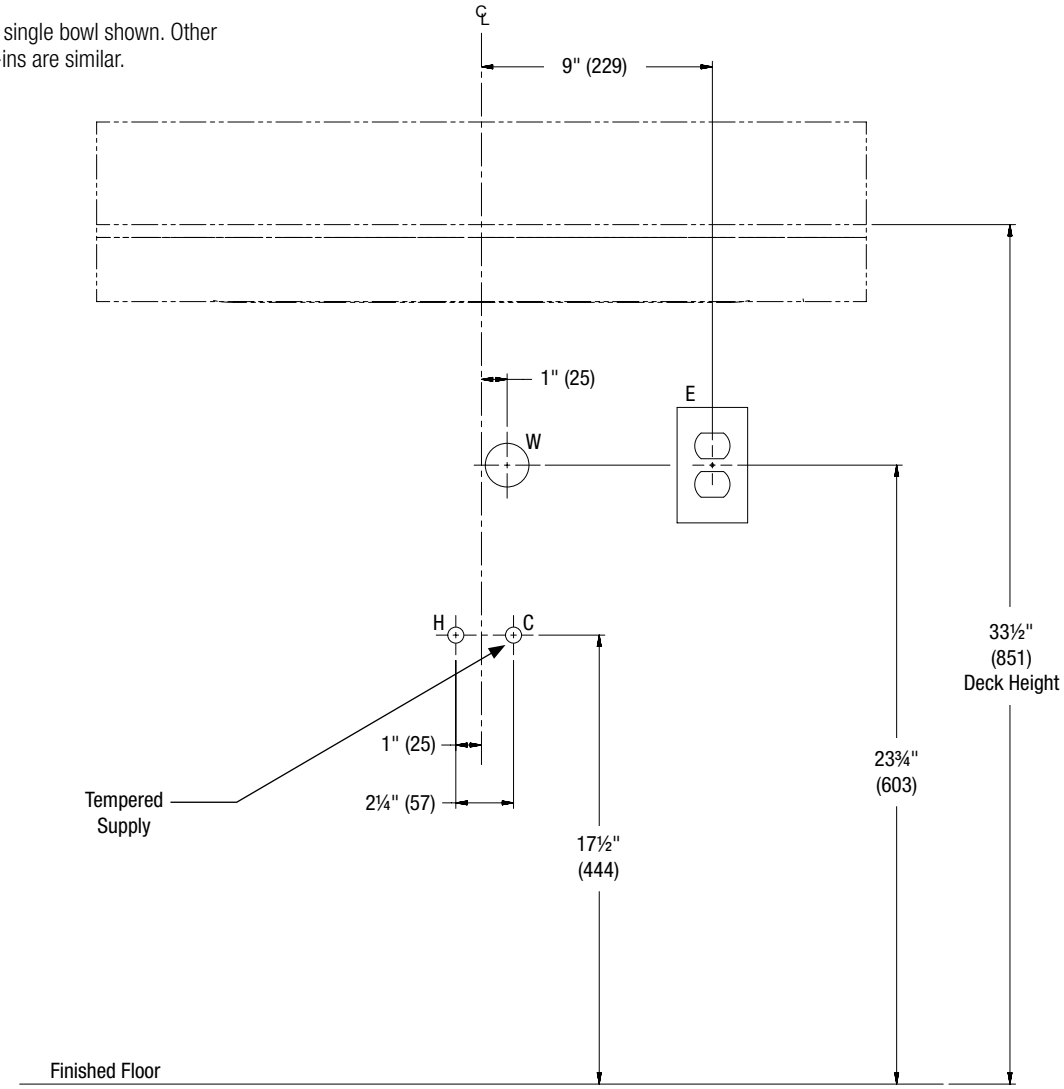

CODE	DESCRIPTION	QTY.
W	1½" NPT Drain, Stub-out 2" from wall	1
E	Dedicated 120V AC, GFCI outlet properly grounded and no more than 4 ft from the GFCI outlet	1
H,C	1/2" nominal (5/8" O.D. Comp.) Hot/Cold supplies, stub-out 2" from wall	

* If no GFCI outlet is provided,contact a licensed electrician to assure electrical connections in accordance with local building codes.

© 2024 Bradley
P.O. Box 309, Menomonee Falls, WI 53052-0309
800 BRADLEY (800 272 3539) +1 262 251 6000
bradleycorp.com
This information is subject to change without notice.