TLX-2
Express® Lavatory System – TLX Series

Key Features

- Seamless, one-piece lavatory is a cost effective upgrade to traditional fabricated counters with seams
- With fewer plumbing connections, installs faster than traditional counters & sinks
- Easy-to-clean, linear design minimizes flat areas where water could puddle
- 1 person access panel install and removal
- ADA and TAS compliant
- Available in a variety of Terreon® solid surface colors
- Compatible with WashBar® Duo and Verge™ deck-mounted soap dispensers and faucets
- Available with standard flexible bracket design or in wall carrier for various installation types and requirements. Both IAPMO certified to meet or exceed ANSI load requirements.

Specifications

Accommodates one or two users. These units handle washroom traffic quickly and economically. Robust design meets or exceeds the ANSI load requirements. This system can be mounted at different heights to accommodate hand washing for adults, children, young children, and those with disabilities. Meets Enhanced Reach when paired with WashBar Duo. Search CSI 3-part specification on bradleycorp.com for CSI spec format.

Product Compliance

Listed by IAPMO R&T to

- Uniform Plumbing Code (UPC)
- National Plumbing Code of Canada
- International Plumbing Code (IPC)
- IGC 156
- IGC 127 (WashBar)
- ASME A112.6.1M (In Wall Carrier)

Listed by UL Environment to

- GreenGuard Gold

Complies with

- ADA
- ICC/ANSI 117.1
- TAS
- Enhanced Reach IC A117.1, 606.5 (WashBar Duo)
- NSF/ANSI 372
- CSA B45.5/IAPMO Z124

Sustainability

- Terreon participates in the mindful MATERIALS library

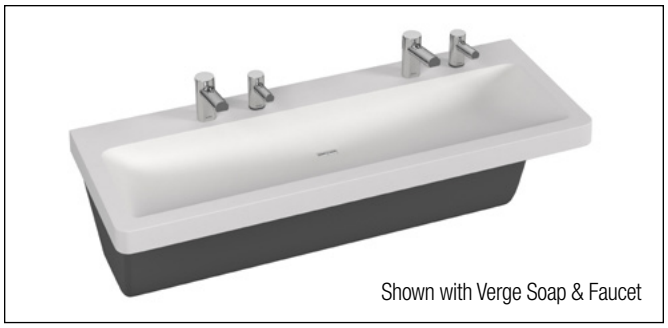

Shown with Verge Soap & Faucet

Finishes

Click on any color swatch to view as a larger image.

- Polished Chrome
- Brushed Black Stainless*
- Brushed Stainless*
- Brushed Bronze*
- Brushed Brass*
- Brushed Nickel*

*PVD Finishes, see PVD Finishes section.

* PVD Finishes

Physical Vapor Deposition is an intricate, environmentally friendly finishing process that molecularly bonds the finish to the faucet, creating a very hard, durable surface that will not corrode, discolor, or tarnish.

Compatible Bradley Products

- Verge Coordinated Soap and Faucet
- WashBar Duo
- In-wall Lav Carrier

This plumbing fixture is designed for hand washing only. It is not intended to dispense water for human consumption through drinking or for preparation of food or beverages.

This information is subject to change without notice.

© 2024 Bradley
P.O. Box 309, Menomonee Falls, WI 53052-0309
800 BRADLEY (800 272 3539) +1 262 251 6000
bradleycorp.com

Construction

Basin
Constructed of Terreon, a densified solid surface material composed of a bio-based resin. Terreon is resistant to chemicals, stains, burns, and impact. Surface damage can be easily repaired with every day cleansers or fine grit abrasives. Terreon is GREENGUARD® certified as low-emitting materials.

Mounting Support
Offering two robust mounting support solutions to meet diverse installation needs: certified in-wall carrier for high-strength, concealed support, and our standard bracket design that provides flexible stud or wall blocking anchor locations. Both options are IAPMO certified and meet or exceed ANSI load requirements, ensuring durable performance and code-compliant installation.

Access Panel
Unique access panel design pivots on stainless steel brackets which easily allows for one person installation and removal. Standard thumb screw fasteners and vandal-resistant fasteners included as standard. The access panel is composed of high impact polymer so it will not chip, peel or flake. The fully enclosed vandal-resistant design eliminates the need for plumbing wrap.

Strainer and Drain Assembly
System comes complete with 300 series stainless steel strainers, tailpiece connection and one drain rough-in with one drain connection.

Vandal Resistance
Water supplies, valving, waste assembly and other optional items are completely concealed within the high impact resistant access panel. Vandal-resistant access panel fasteners included as standard. Terreon bowl material is also highly vandal resistant and repairable.

Faucets*
Choose from our 0.35 gpm (1.30 Lpm), 0.05 gpc (0.25 Lpc) or 0.50 gpm (1.90 Lpm), 0.09 gpc (0.35 Lpc) Verge Faucets – Crestt, Metro, Linea, or Zen Series. Available in 0.35 gpm (1.30 Lpm), 0.05 gpc (0.25 Lpc) or 0.5 gpm (1.90 Lpm), 0.09 gpc (0.35 Lpc), WashBar Duo WBD1 includes soap dispenser and faucet in a single piece casting. Verge faucets and WashBar Duo come as chrome-plated with optional in-stock PVD finishes. Also available are 4" centerset, 8" centerset, and centershank faucet drillings are available for faucets by others. Optional 4" centerset trim plates are available for additional vandal resistance.

Soap Dispensers*
Choose from our Verge Deck-Mounted Soap Dispensers – Crestt, Metro, Linea, or Zen Series. Soap drillings available for soap by others. Also available with WashBar Duo WBD1, foam or liquid soap. WashBar Duo accommodates a 1 gallon cylindrical soap container, provided by others. Verge soap dispensers and WashBar Duo come as chrome-plated with optional in-stock PVD finishes.

*****For primary/elementary school applications, Bradley recommends hands-free activation for soap dispensers and faucets in lieu of manual activation to ensure proper reach for kindergarten students. TLX-2 meets Enhanced Reach requirements when paired with WashBar Duo WBD1.

© 2024 Bradley
P.O. Box 309, Menomonee Falls, WI 53052-0309
800 BRADLEY (800 272 3539) +1 262 251 6000
bradleycorp.com
This information is subject to change without notice.

Top View (shown with Verge Soap & Faucet) (mm)

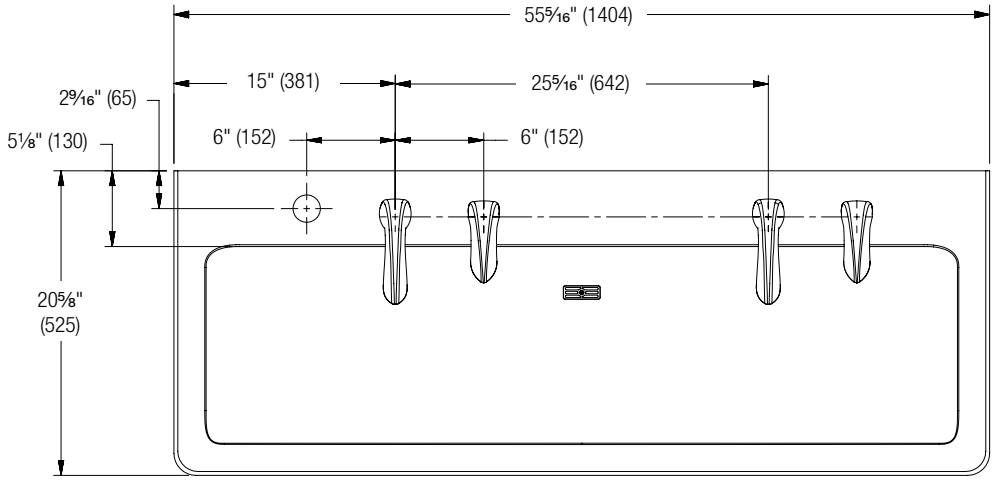

Front View (shown with Verge Soap & Faucet) (mm)

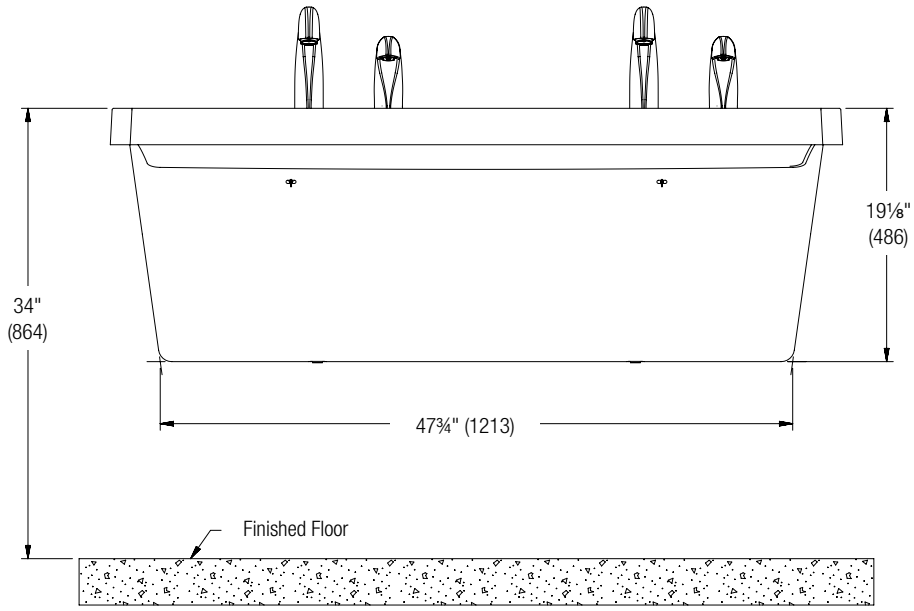

© 2024 Bradley
P.O. Box 309, Menomonee Falls, WI 53052-0309
800 BRADLEY (800 272 3539) +1 262 251 6000
bradleycorp.com
This information is subject to change without notice.

Top View (shown with WBD1) (mm)

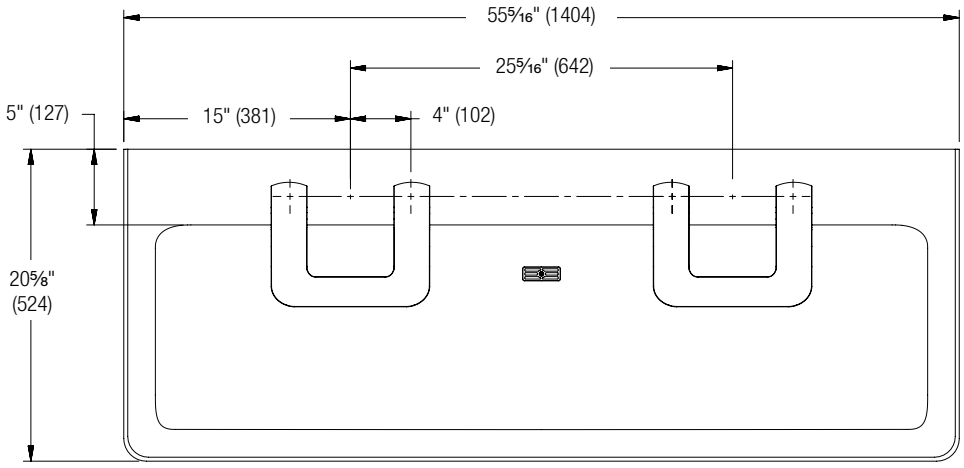

Front View (shown with WBD1) (mm)

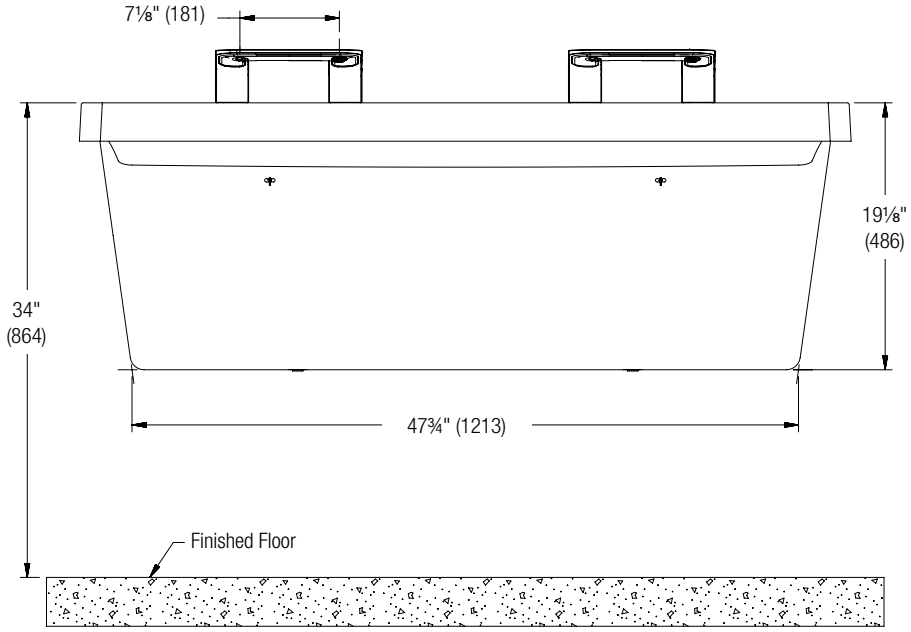

This information is subject to change without notice.

© 2024 Bradley
P.O. Box 309, Menomonee Falls, WI 53052-0309
800 BRADLEY (800 272 3539) +1 262 251 6000
bradleycorp.com

Side View

(mm)

Standard Height (ADA) – Verge Faucet

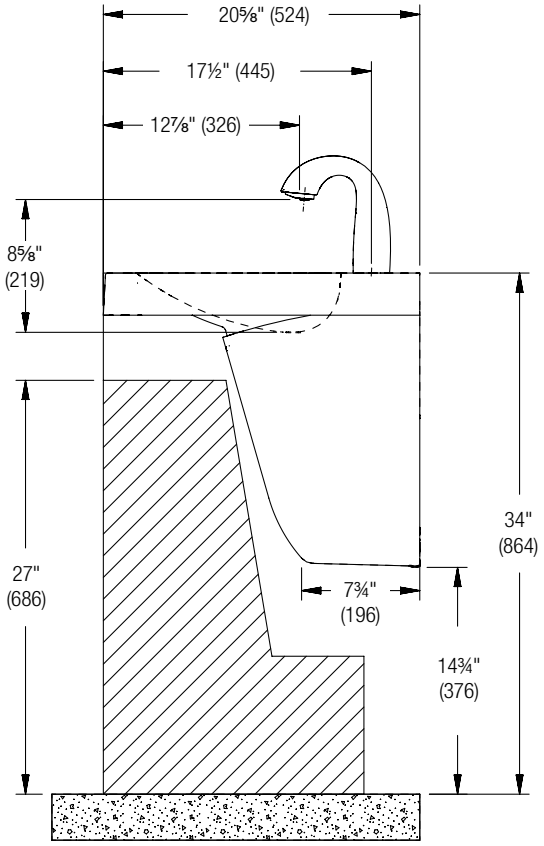

Standard Height (ADA) – WBD1

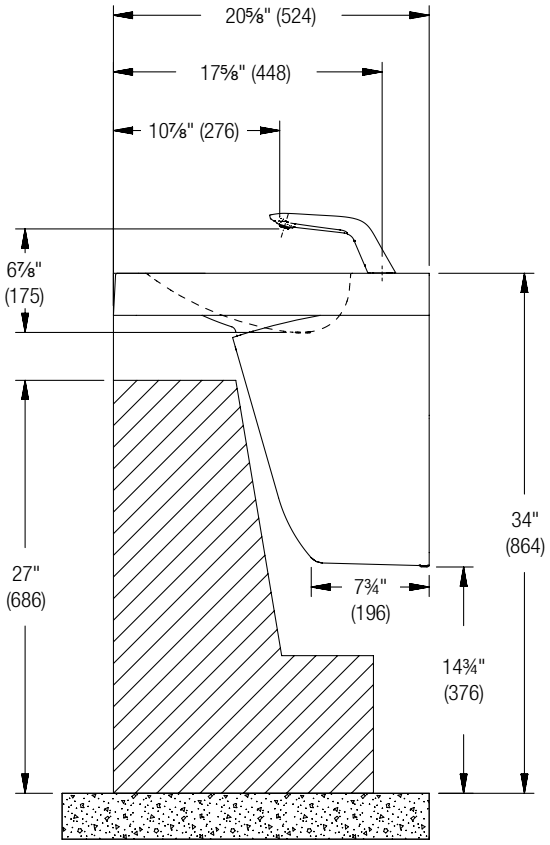

Rim Height	Vertical Height Adjustments	Fixture Style	Notes
34"	No Adjustment	Standard ADA & TAS	At least one basin must meet dimensional requirements and have proper reach, knee, and toe clearance.
31"	*Subtract 3"	Juvenile ADA & TAS	At least one basin must meet dimensional requirements and have proper reach, knee, and toe clearance.
26"	*Subtract 8"	Junior	For use by younger children where ADA guidelines are not a concern.

© 2024 Bradley
P.O. Box 309, Menomonee Falls, WI 53052-0309
800 BRADLEY (800 272 3539) +1 262 251 6000
bradleycorp.com
This information is subject to change without notice.

Side View

(mm)

Juvenile Height (ADA) – Verge Faucet

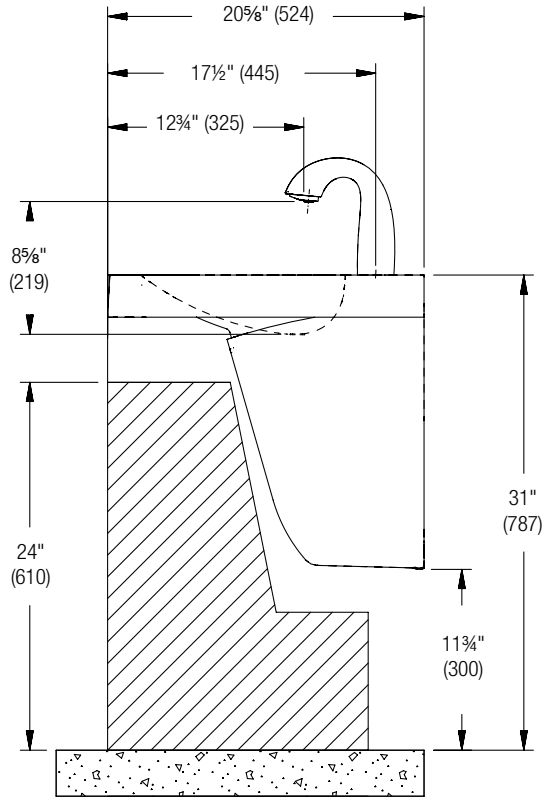

Juvenile Height (ADA) – WBD1

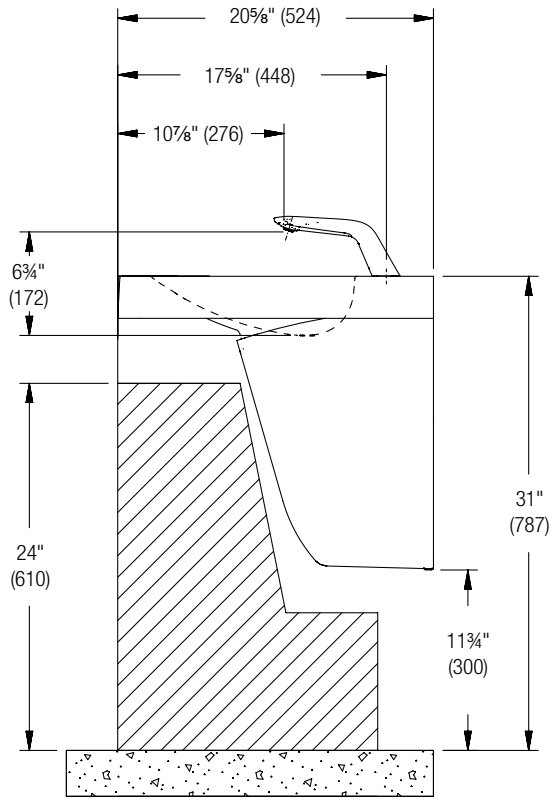

Rim Height	Vertical Height Adjustments	Fixture Style	Notes
34"	No Adjustment	Standard ADA & TAS	At least one basin must meet dimensional requirements and have proper reach, knee, and toe clearance.
31"	*Subtract 3"	Juvenile ADA & TAS	At least one basin must meet dimensional requirements and have proper reach, knee, and toe clearance.
26"	*Subtract 8"	Junior	For use by younger children where ADA guidelines are not a concern.

© 2024 Bradley
P.O. Box 309, Menomonee Falls, WI 53052-0309
800 BRADLEY (800 272 3539) +1 262 251 6000
bradleycorp.com
This information is subject to change without notice.

Side View

(mm)

CSA Height – Verge Faucet

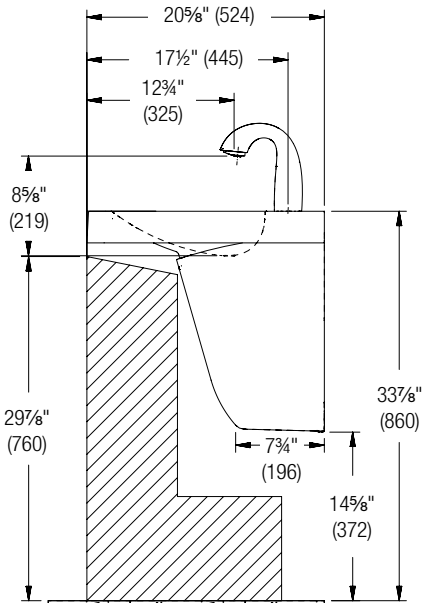

CSA Height – WBD1

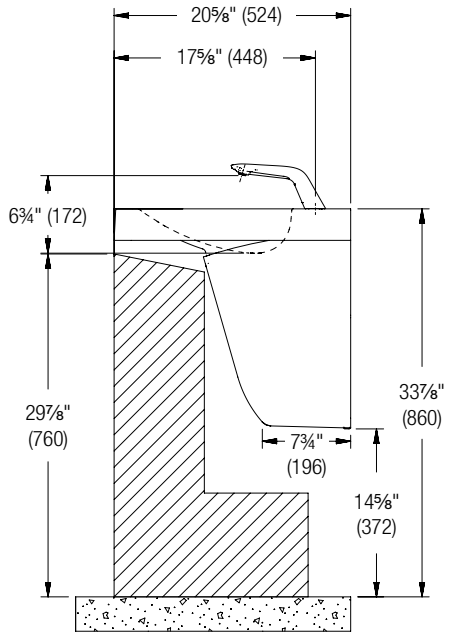

OBC Height – Verge Faucet

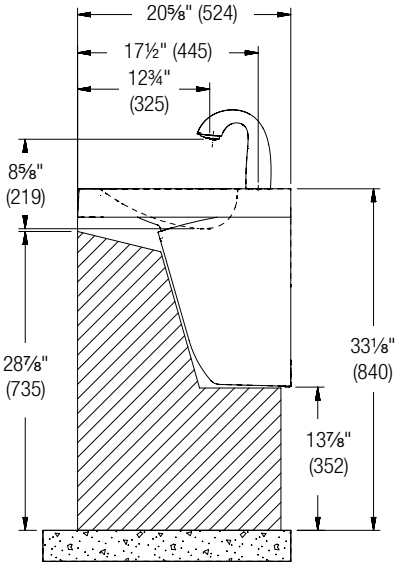

OBC Height – WBD1

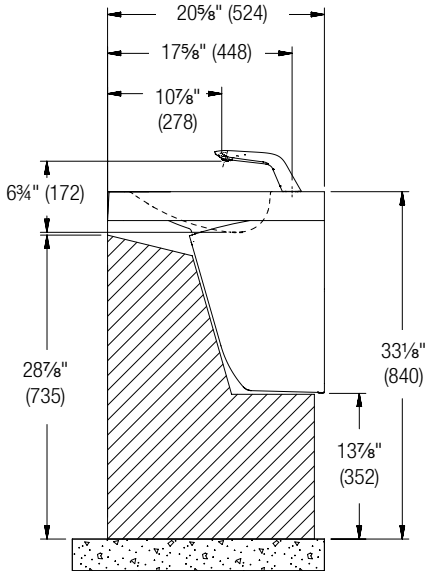

This information is subject to change without notice.

© 2024 Bradley
P.O. Box 309, Menomonee Falls, WI 53052-0309
800 BRADLEY (800 272 3539) +1 262 251 6000
bradleycorp.com

Structural Rough-Ins (mm)

Mounting for Standard ADA and TAS height shown.

Areas highlighted in gray require sufficient backing compliant with local building codes.

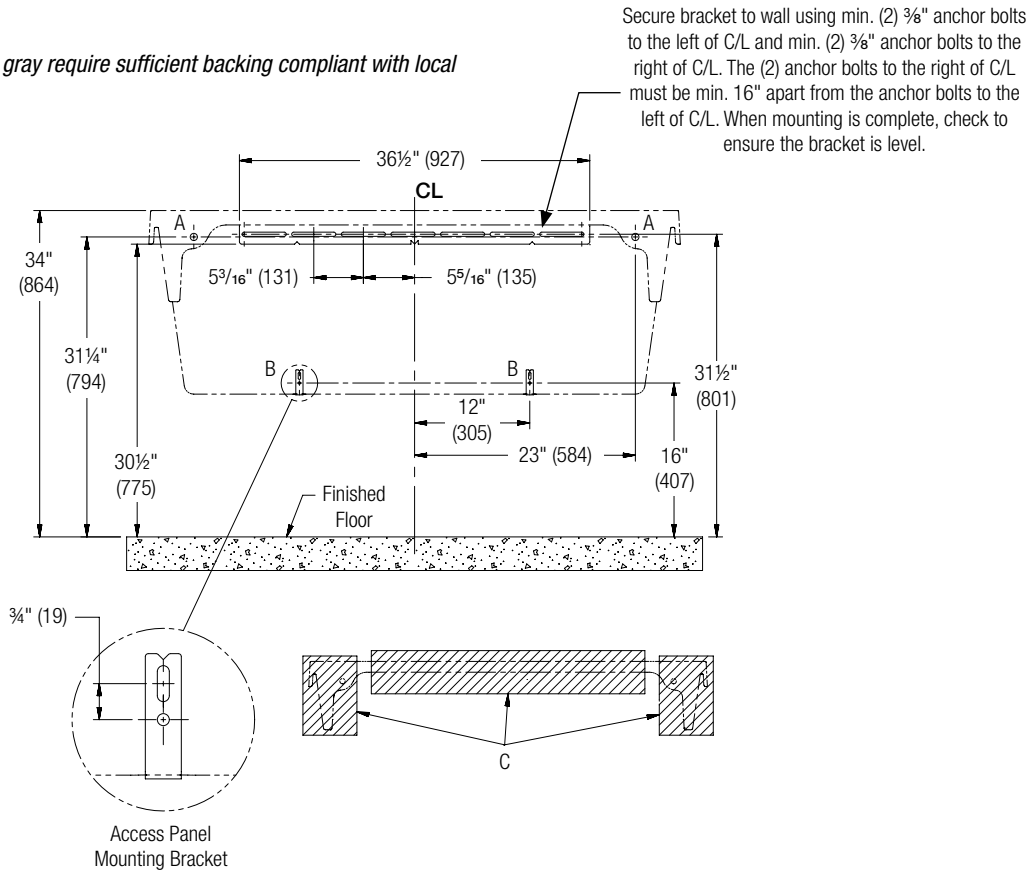

CODE	DESCRIPTION	QTY.
A	Install (1) ⅜" wall anchor with a minimum pull-out force of 1,000 lb per local codes at locations shown	2
B	Install (2) wall anchors per bracket with a minimum pull-out force of 100 lb per local codes at locations shown	2
C	Provide structural backing compliant with local building codes.	2

RIM HEIGHT	VERTICAL HEIGHT ADJUSTMENTS	FIXTURE STYLE	NOTES
34"	No Adjustment	Standard ADA & TAS	At least one basin must meet dimensional requirements and have proper reach, knee, and toe clearance.
31"	*Subtract 3"	Juvenile ADA & TAS	At least one basin must meet dimensional requirements and have proper reach, knee, and toe clearance.
26"	*Subtract 8"	Junior	For use by younger children where ADA guidelines are not a concern.

© 2024 Bradley
P.O. Box 309, Menomonee Falls, WI 53052-0309
800 BRADLEY (800 272 3539) +1 262 251 6000
bradleycorp.com

Plumbing & Electrical Rough-Ins (mm)

Mounting for Standard ADA and TAS height shown.

Electric outlet locations shown below reflect potential locations.
Refer to the power supply and outlet information below.

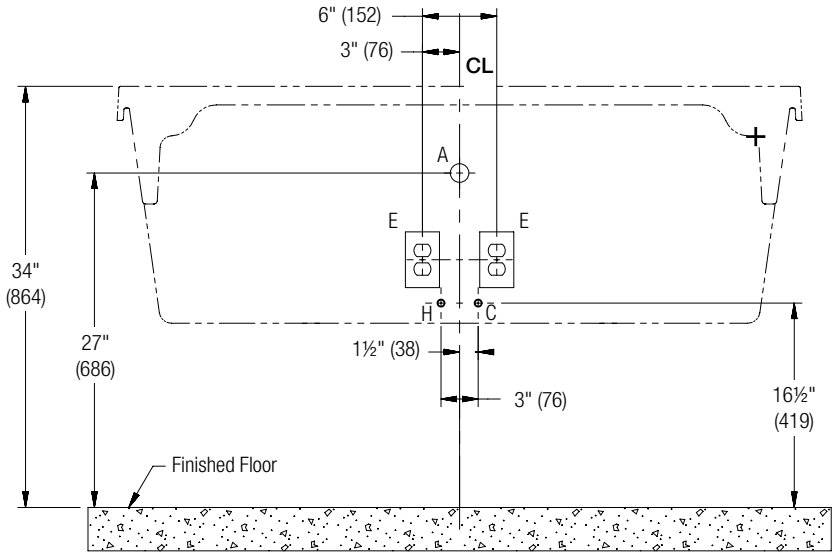

CODE	DESCRIPTION	QTY.
A	1½" NPT Drain, Stub-out 2" from wall	1
H,C	½" Nominal (⅝" O.D. Comp.) Hot/Cold supplies, Stub-out 2" from wall	1
E	110V GFI protected electrical outlet (AC faucet and soap only)	2

VERGE SOAP & FAUCET POWER SUPPLY			
	1-Station	**2-Station**	**3-Station**
Faucet Only	AC Adapter x 1 1 duplex outlet req.	AC Adapter x 2 1 duplex outlet req.	AC Splitter* x 1 1 duplex outlet req.
Soap Only	AC Adapter x 1 1 duplex outlet req.	AC Adapter x 2 1 duplex outlet req.	AC Splitter* x 1 1 duplex outlet req.
Faucet & Soap	AC Adapter x 2 1 duplex outlet req.	AC Splitter* x 1 1 duplex outlet req.	AC Splitter* x 2 1 duplex outlet req.
Soap & Multi-Feed	NA	NA	AC Splitter* x 1 1 duplex outlet req.
Faucet, Soap, & Multi-Feed	NA	NA	AC Splitter* x 2 1 duplex outlet req.

*AC splitter assembly includes one adapter, one 4-way splitter, and four extensions.

© 2024 Bradley
P.O. Box 309, Menomonee Falls, WI 53052-0309
800 BRADLEY (800 272 3539) +1 262 251 6000
bradleycorp.com

Rough-Ins – Verge Soap & Faucet (mm)

Mounting for Standard ADA and TAS height shown.

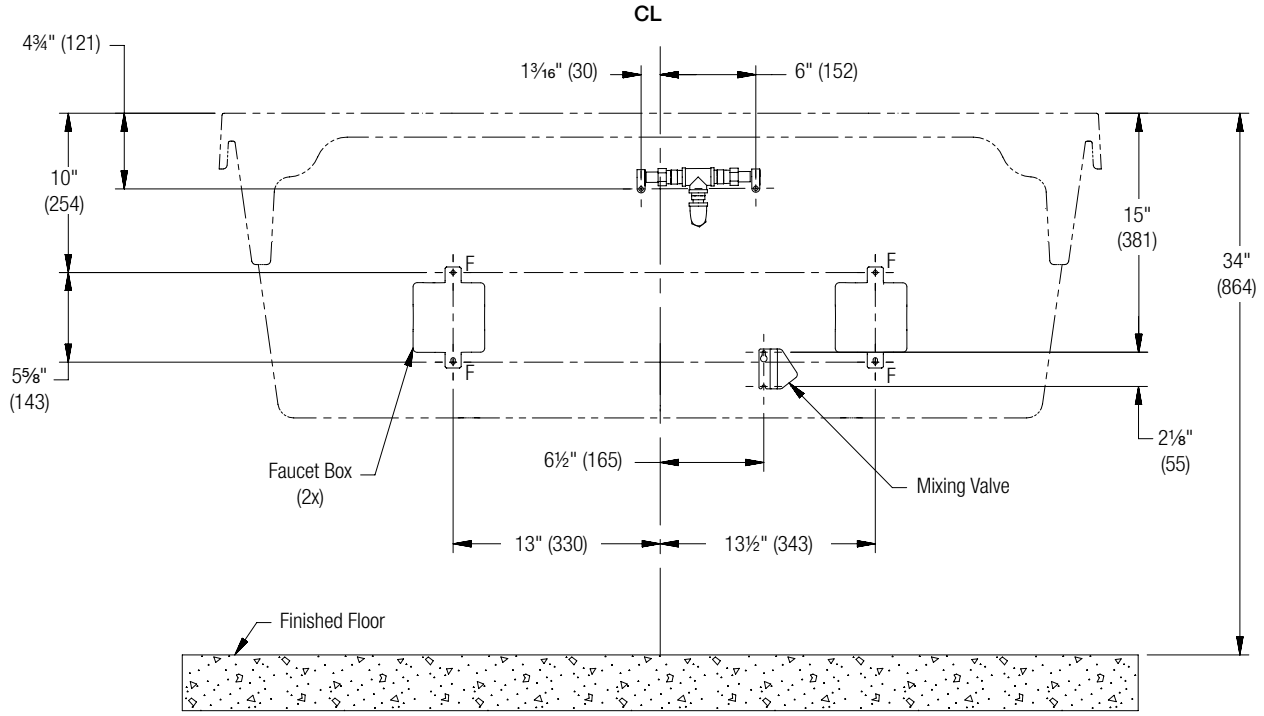

CODE	DESCRIPTION	QTY.
F	#10 Anchors for Faucet Control Box Installation Provide sufficient backing behind the mounting locations.	4

This information is subject to change without notice.

© 2024 Bradley
P.O. Box 309, Menomonee Falls, WI 53052-0309
800 BRADLEY (800 272 3539) +1 262 251 6000
bradleycorp.com

Rough-Ins – WBD1

(mm)

Mounting for Standard ADA and TAS height shown.

Combined waste option is not available for use with WBD1 faucet assembly.

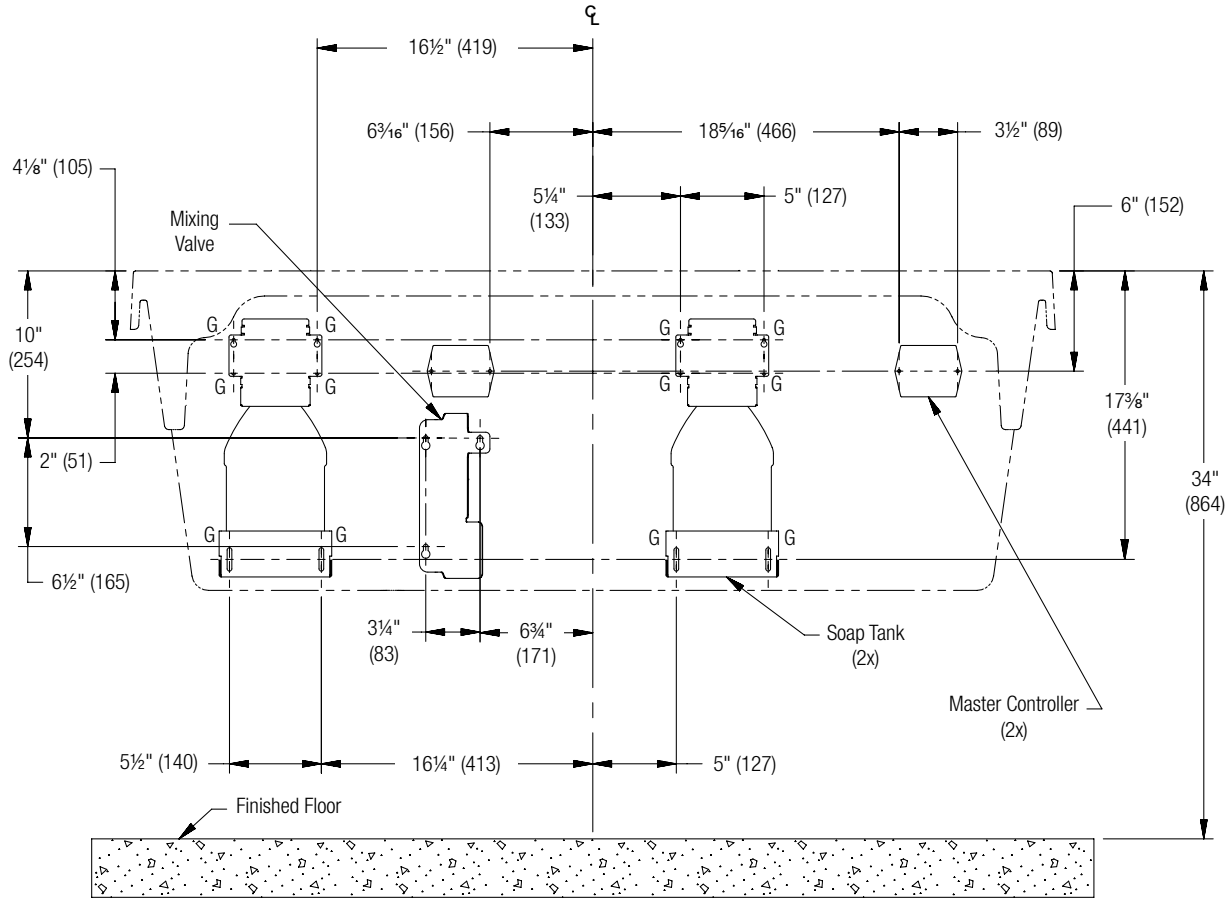

CODE	DESCRIPTION	QTY.
G	#10 Anchors for Soap Tank Bracket (100 lb pull out force) Provide sufficient backing behind the mounting locations.	12

This information is subject to change without notice.

© 2024 Bradley
P.O. Box 309, Menomonee Falls, WI 53052-0309
800 BRADLEY (800 272 3539) +1 262 251 6000
bradleycorp.com

Rough-Ins – Verge Individual Top-Fill Soap (mm)

Mounting for Standard ADA and TAS height shown.

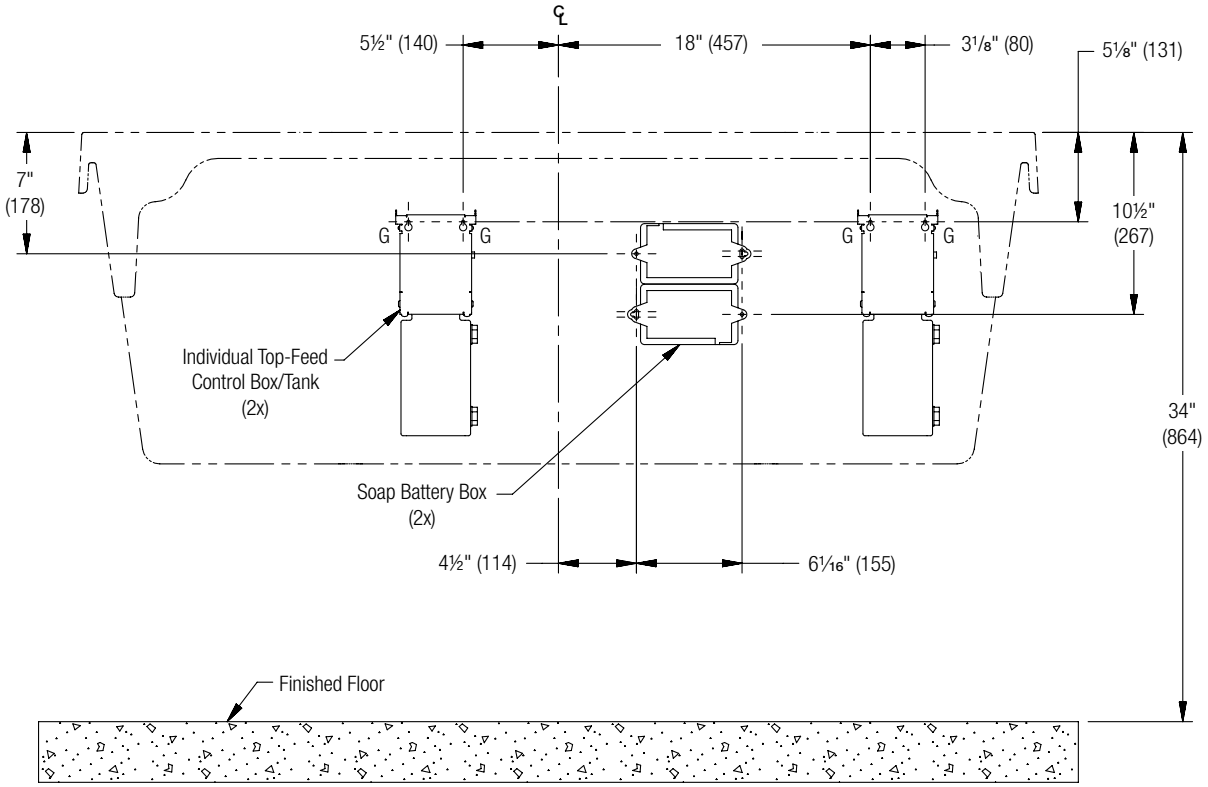

CODE	DESCRIPTION	QTY.
G	#10 Anchors for Soap Tank Installation Provide sufficient backing behind the mounting locations.	4

© 2024 Bradley
P.O. Box 309, Menomonee Falls, WI 53052-0309
800 BRADLEY (800 272 3539) +1 262 251 6000
bradleycorp.com
This information is subject to change without notice.

Rough-Ins – Verge Multi-Feed Soap (mm)

Mounting for Standard ADA and TAS height shown.

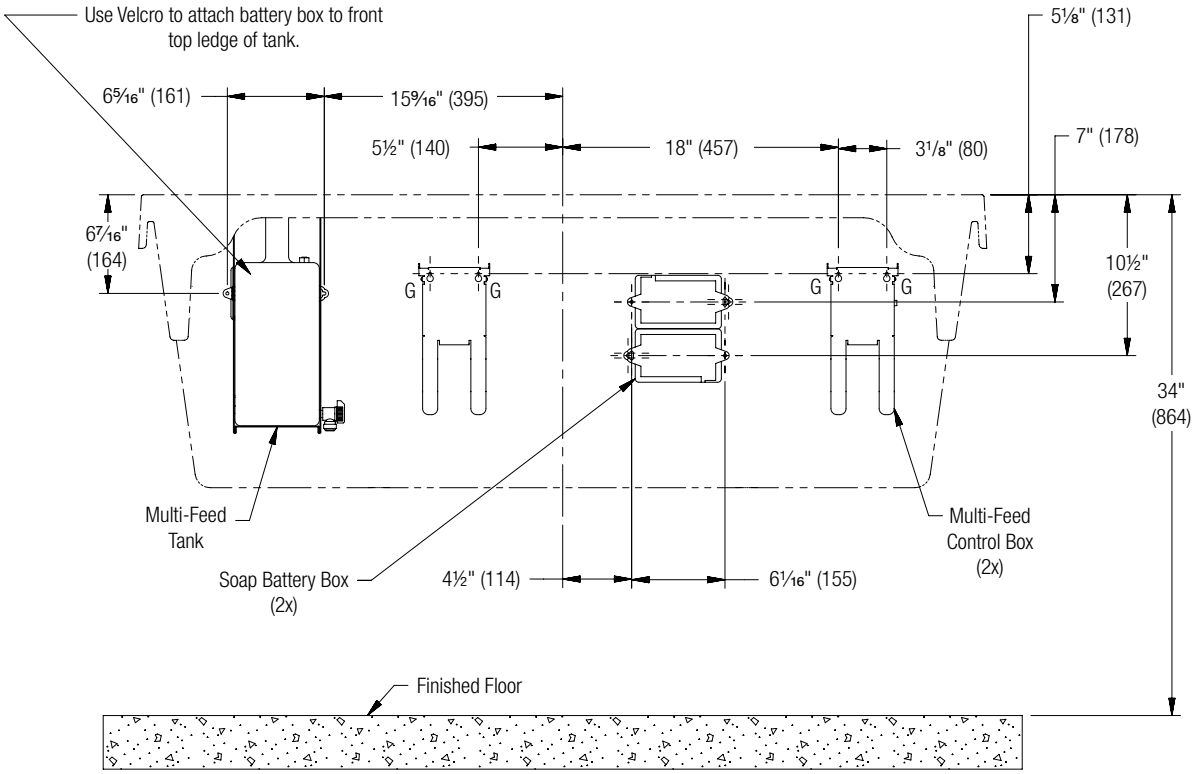

CODE	DESCRIPTION	QTY.
G	#10 Anchors for Soap Tank Installation Provide sufficient backing behind the mounting locations.	4

© 2024 Bradley
P.O. Box 309, Menomonee Falls, WI 53052-0309
800 BRADLEY (800 272 3539) +1 262 251 6000
bradleycorp.com
This information is subject to change without notice.

Rough-Ins for S17-392 (2-Station In-Wall Lav Carrier) Rough-Ins (mm)

In-Wall Lav Carrier Tech Data

Fixture	"A" Finished Floor Dimension
LVAD2, LVQD2, LVSD2	32-1/2"
ELX-2	32-7/8"
GLX-2, TLX-2	32-1/2"

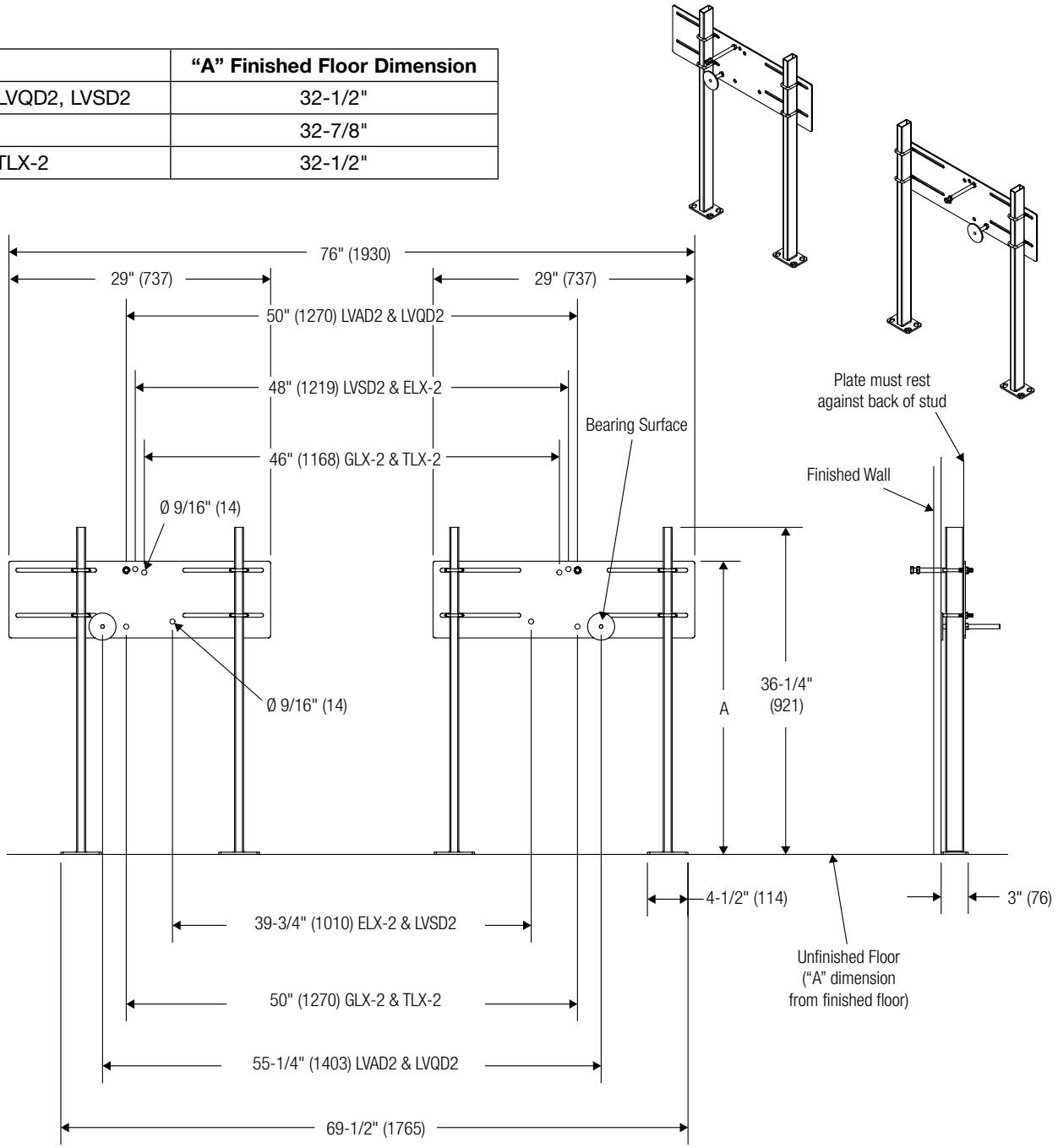

This information is subject to change without notice.

© 2024 Bradley
P.O. Box 309, Menomonee Falls, WI 53052-0309
800 BRADLEY (800 272 3539) +1 262 251 6000
bradleycorp.com

Models (Must select one)

Model	Description
○ TLX-2	Express Lavatory System TLX-2

Country of Installation (Must select one)

○ C1	United States or Canada

Standard Selections (Must select one from each category)

Faucet Type (select one)

○ WBD1	WashBar Duo (available with soap dispenser type WBD1 only) +
○ S53-3100	Verge Faucet – Crestt Series
○ S53-3300	Verge Faucet – Metro Series
○ S53-3500	Verge Faucet – Linea Series
○ S53-3700	Verge Faucet – Zen Series
○ S53-3100-P	Verge Faucet – Crestt Series, Includes Trim Plate §
○ S53-3300-P	Verge Faucet – Metro Series, Includes Trim Plate §
○ S53-3500-P	Verge Faucet – Linea Series, Includes Trim Plate §
○ S53-3700-P	Verge Faucet – Zen Series, Includes Trim Plate §
○ WBD1-DO	WashBar Duo Drilling Only
○ 4" Set	4" Centerset (1¼" Drilling Only)
○ 8" Set	8" Centerset (1¼" Drilling Only)
○ SHANK	Centershank (1¼" Drilling Only)
○ NFD	No Faucet Drilling

Faucet Activation Type (select one)

○ R	Touch-Free Activation △
○ NONE	No Activation ▲

Water Supply Type (select one)

○ T	Thermostatic Mixing Assembly (supply hoses and shut-offs included)
○ L	Single Tempered Line Assembly (supply hoses and shut-offs included)

Flow Control Type‡ (select one)

○ 3	0.35 gpm (1.30 Lpm) Silicone Tip, Multiple Individual Laminar Flow Streams
○ 5	0.50 gpm (1.90 Lpm) Silicone Tip, Multiple Individual Laminar Flow Streams

Faucet Finish Type‡ (select one)

○ PC	Polished Chrome
○ BB	Brushed Black Stainless
○ BS	Brushed Stainless
○ BZ	Brushed Bronze
○ BR	Brushed Brass
○ BN	Brushed Nickel

Faucet Power Supply (select one)

○ AC	AC Power△**
○ BA	Battery – 4x AA alkaline batteries included per faucet△
○ NONE	No Power Supply ▲

Soap Dispenser Type (select one)

○ WBD1	WashBar Duo (available with faucet type WBD1 only) +
○ 6-3100	Verge Deck-Mounted Soap Dispenser – Crestt Series △
○ 6-3300	Verge Deck-Mounted Soap Dispenser – Metro Series △
○ 6-3500	Verge Deck-Mounted Soap Dispenser – Linea Series △
○ 6-3700	Verge Deck-Mounted Soap Dispenser – Zen Series △
○ WBD1-DO	WashBar Duo Drilling Only
○ SDO	1-3/8" Soap Drilling Only
○ NSD	No Soap Dispenser/No Drilling

Soap Activation Type (select one)

○ R	Touch-Free Activation ◇
○ NONE	No Activation ♦

Soap Type^ (select one)

○ F	Foam Soap
○ L	Liquid Soap

Soap Fill System◇ (select one)

○ T	Single (top fill at spout)
○ M	Multi-Feed (shared tank, includes 6-SOAP-MFT Multi-Feed Soap Tank Assembly)

Soap Dispenser Finish Type◇ (select one)

○ PC	Polished Chrome
○ BB	Brushed Black Stainless
○ BS	Brushed Stainless
○ BZ	Brushed Bronze
○ BR	Brushed Brass
○ BN	Brushed Nickel

Soap Power Supply (select one)

○ AC	AC Power◇**
○ BA	Battery – 4x D-cell batteries included per dispenser◇
○ NONE	No Power Supply♦

** AC power supply will include either individual AC plug-in adapter or 4-way AC splitter assembly depending on configuration.

△ Available with Verge faucet selection only.

▲ Available with faucet drilling only.

◇ Available with Verge soap dispenser selection only.

♦ Available with soap drilling only.

† This color contains large, randomly distributed chips.

‡ Available with Verge faucet or WBD1 selection only.

^ Available with Verge soap or WBD1 selection only.

+ Combined Waste not available with WBD1.

§ Trim plate finish will match Faucet Finish for PC, BB & BS. All other faucet finishes will receive a PC trim plate.

This information is subject to change without notice.

© 2024 Bradley
P.O. Box 309, Menomonee Falls, WI 53052-0309
800 BRADLEY (800 272 3539) +1 262 251 6000
bradleycorp.com

Standard Selections (Must select one from each category)

Color of Terreon Deck (select one)

NOTE: Click on any swatch to view as a larger image.

Standard Colors

○ **ALP-WHITE**	Alpine White	○ **PEBBLE**	Pebble Beach
○ **DRIFT**	Driftwood †	○ **PEP-WHT**	Peppered White
○ **DS-WHT**	Designer White	○ **POLAR**	Polar Ice †
○ **E-GRAY**	Empire Gray	○ **RIVER**	Riverstone
○ **GLACIER**	Glacier	○ **SAND**	Sandtrap
○ **GRAPH**	Graphite	○ **S-CREEK**	Stone Creek
○ **LANNON**	LannonStone	○ **S-MIST**	Silver Mist
○ **MOONSTONE**	Moonstone †	○ **WHT-SAND**	White Sand

Access Panel Type (select one)

○ **COAL** Coal

Waste Assembly Type (select one)

○ **CHROME** Chrome-Plated Waste Assembly (1 P-Trap/1 drain connection)
○ **POLY** Polypropylene Waste Assembly (1 P-Trap/1 drain connection)
○ **NONE** Waste Assembly by Others

** AC power supply will include either individual AC plug-in adapter or 4-way AC splitter assembly depending on configuration.

△ Available with Verge faucet selection only.

▲ Available with faucet drilling only.

◊ Available with Verge soap dispenser selection only.

♦ Available with soap drilling only.

† This color contains large, randomly distributed chips.

‡ Available with Verge faucet or WBD1 selection only.

^ Available with Verge soap or WBD1 selection only.

+ Combined Waste not available with WBD1.

§ Trim plate finish will match Faucet Finish for PC, BB & BS. All other faucet finishes will receive a PC trim plate.

Additional Parts for Purchase

(Must order as separate line item)

Bradley Certified Floor Mounted Carrier

○ **S17-392** 2 station in-wall plate style lav carrier
(Includes 2 hanger plates, 2 structural uprights per plate, hardware)

© 2024 Bradley
P.O. Box 309, Menomonee Falls, WI 53052-0309
800 BRADLEY (800 272 3539) +1 262 251 6000
bradleycorp.com
This information is subject to change without notice.