LVQD2
Verge® with WashBar® Technology – LVQ-Series

Key Features

- One piece, chrome-plated WashBar® includes touch-free soap, water, and hand dryer
- WashBar technology intuitively guides user and eliminates simultaneous activations
- Basins available in polished Evero® Classic or Evero Matte cast quartz materials
- Basin and drain engineered to evacuate water and dissipate air flow
- Single piece cast basin eliminates caulk lines and seams
- WashBar and basin system comes complete with mounting, access panel, drain assembly, and plumbing connections

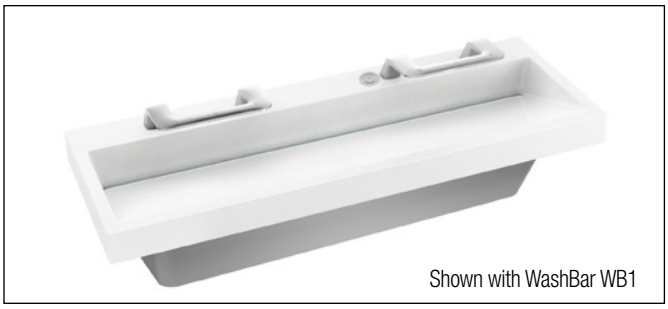

Shown with WashBar WB1

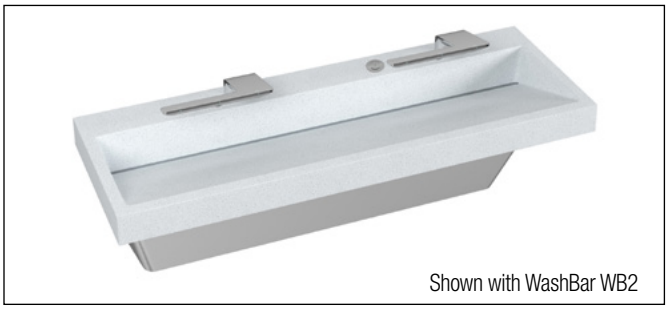

Shown with WashBar WB2

Specifications

The Verge LVQD2 Wash Basin is 60" in length and is designed to accommodate one to two users at a time with standard lavatory spacing positioned on 30" centers. The single piece, all-in-one WashBar allows users to access soap, water, and a hand dryer without leaving the hand washing station. The unit handles washroom traffic quickly and economically, while providing each user with personal space. LVQD2 is available in Evero Classic - Geo Series or Pearl Series, or Evero Matte - Mason Series basin material.

Product Compliance

Listed by IAPMO R&T to

- Uniform Plumbing Code (UPC)
- National Plumbing Code of Canada
- International Plumbing Code (IPC)
- LVQD2 Evero Classic & Evero Matte: IGC 156 and the requirements of CSA B45.5/IAPMO Z124 and ASME A112.18.1/CSA B125.1
- LVQD2 Evero Matte: IGC 156 and the requirements of CSA B45.8/IAPMO Z403
- IGC 127 (WashBar)

Listed by UL to

- UL499, CAN/CSA C22.2 No 36-08 (Hand Dryer)

HAND DRYER

Listed by UL Environment to

- GreenGuard Gold

Complies with

- ADA
- ICC/ANSI 117.1
- TAS
- NSF/ANSI 372

Sustainability

- Evero Classic and Evero Matte participate in the mindful MATERIALS library

Finishes

Click on any color swatch to view as a larger image.

- Polished Chrome
- Brushed Black Stainless*
- Brushed Stainless*
- Brushed Bronze*
- Brushed Brass*
- Brushed Nickel*

*PVD Finishes, see PVD Finishes section.

* PVD Finishes

Physical Vapor Deposition is an intricate, environmentally friendly finishing process that molecularly bonds the finish to the faucet, creating a very hard, durable surface that will not corrode, discolor, or tarnish.

Compatible Bradley Products

- Verge Multi-Feed Soap System

This plumbing fixture is designed for hand washing only. It is not intended to dispense water for human consumption through drinking or for preparation of food or beverages.

Serves the American Disabilities Act and ICC/ANSI 117.1 guidelines, citations 306, 308, 309.4, 606.4, 606.5 when installed according to these requirements.

Consult local codes and standards.

This information is subject to change without notice.

© 2024 Bradley
P.O. Box 309, Menomonee Falls, WI 53052-0309
800 BRADLEY (800 272 3539) +1 262 251 6000
bradleycorp.com

Construction

Basin

The basin has been designed to direct water to a trench drain and features a 300 series stainless steel drain cap. The basin and drain cap work together to evacuate water and dissipate airflow to prevent splashing on the user or floor. The basin is constructed of either the natural quartz surface Evero Classic - Geo or Pearl Series, or the natural stone-like quartz surface Evero Matte - Mason Series.

Evero Classic - Geo Series is a polished natural quartz surface made from a blend of bio-based resin, natural quartz, granite, and other exotic minerals.

Evero Classic - Pearl Series is a polished natural quartz surface made of bio-based resin, sea shells, and natural quartz.

Evero Matte - Mason Series is a matte natural stone-like quartz surface made from a blend of bio-based resin and a unique mixture of extra fine grade quartz.

✔ Variations in the natural stone color, pattern, size, shape, and shade are inherent. Due to these unique characteristics, please expect subtle shade variations when units are installed adjacent to each other.

WashBar

All-in-One, chrome-plated cast metal WashBar includes touch-free soap, water, and hand dryer. Available in optional in-stock PVD finishes. The WashBar is secured to the basin with two anti-rotational shanks. Blue LED lights help guide the user to the WashBar, indicating the three functions. The LED light will change from blue to green to signify that the function is in use. Each function is easily identified by the corresponding icon on the WashBar's top surface.

Sensors are programmed to eliminate simultaneous activations of nearby functions. Each sensor includes a turn-off delay of 1-2 seconds to aid in a smooth, controlled hand-washing and drying operation. WashBar sensors are not affected by varying skin tones or darkness. Smart technology allows the facilities manager or maintenance staff to clean and configure with ease.

Cleaning Mode

WashBar has an activation feature to put the unit into cleaning mode to allow for easy cleaning of the WashBar and basin without activating the functions.

Configuration Mode

The WashBar also has a configuration mode to identify how many cycles are on the soap, faucet, and dryer. This mode also allows for dryer speed adjustment at low, medium, and high levels.

Soap Dispensers

The soap dispenser is located on the left side of the WashBar. This eliminates any soap from dripping on counters or onto the floor, minimizing slip hazards and allows for easy cleaning. Choose between a foam or liquid soap dispenser and either Top Fill Multi-Feed system or bottom fill system.

Top Fill Multi-Feed System

Top Fill Multi-Feed soap system includes a 1.3 gallon (166.5 oz) tank and top fill port located on the top surface of the wash basin. Elegant translucent ring integrated on the fill port gives a glowing indication of low soap and overflow conditions. When the ring on the fill port flashes red, simply remove the fill port cap and replenish the soap via the fill port.

Below Fill System

Each WashBar soap system accommodates up to a 1 gallon (3.78 L) container (included) to reduce the number of soap replacements. When the LED light above the soap function turns to solid red, check the soap level and replace the soap container with a full container if necessary. The soap system includes an adapter to fit many 1 gallon (3.78 L) soap containers that are available on the market.

Please visit https://www.bradleycorp.com/maintenance/soap-dispensers for soap recommendations.

Faucet

Faucet is located in the center of the WashBar and has a spray angle of approximately 17 degrees off the vertical. Choose either a 0.5 gpm (1.9 Lpm) or 0.35 gpm (1.30 Lpm) PCA silicone tip, non-aerated spray pattern. Maximum run time is 11 seconds. The 0.50 gpm (1.90 Lpm) flow control option is the equivalent to 0.09 gpc and the 0.35 gpm (1.30 Lpm) flow control option is the equivalent to 0.18 gpc. Automatic 5 second purge within 24 hours of the last use. Recommended operating range is 20-80 psi.

Dryer

The hand dryer is located on the right side of the WashBar, allowing users to dry hands immediately after washing. This virtually eliminates excess water on the floor. The brushless dryer motor provides heated air at two speeds, medium and high, which can be field adjusted by placing the WashBar in Configuration Mode. With the dryer configuration set to high speed, hands can dry in approximately 15 seconds depending on user preference. There is 76 dB (high speed) with hands in air stream.

Electrical

Total rated power is 1200W. Each WashBar station requires a dedicated NEMA 5-15R Receptacle,125V GFCI which is properly grounded and no more than 4 ft from the installation of the dryer assembly. Each 12V DC dryer cable powers the WashBar faucet, soap, and Multi-Feed system via the dedicated outlet.

Access Panel

Minimalistic panel is composed of decorative 300 series stainless steel or black, powder-coated stainless steel. Plumbing components, dryer motor, and soap tank are concealed within the panel. Select the enclosed bottom access panel for vandal-prone applications. The new swing down access panel is designed to ease the maintenance process by eliminating tools and only requires one person for installation. Top edge of the access panel has been hemmed to reduce sharpness.

Support Bracket

Bracket design allows for flexible stud or wall blocking anchor locations. Eliminates the need for in-wall carriers and frame. System is IAPMO certified to meet or exceed ANSI load requirements.

Strainer and Drain Assembly System

Strainer and drain assembly system comes complete with 300 series stainless steel trench drain cap, tailpiece, and polypropylene P-trap. Optional chrome plated P-trap available. Select the slotted drain cap with vandal-resistant screws for vandal-prone applications. The multi-station system is configured with one drain and one set of supplies to reduce the cost associated with individual drains and supplies.

© 2024 Bradley
P.O. Box 309, Menomonee Falls, WI 53052-0309
800 BRADLEY (800 272 3539) +1 262 251 6000
bradleycorp.com
This information is subject to change without notice.

Models (Must select one)

Model	Description
○ LVQD2	Verge with WashBar Technology – LVQ-Series, Two-Station

Standard Selections (Must select one from each category)

Country of Installation

○ **C1** United States or Canada

Material Type (select one)

○ **EC** Evero Classic – Polished Finish

○ **EM** Evero Matte – Matte Finish

Color of Evero® Bowl (select one)

NOTE: Click on any swatch to view as a larger image.

Evero Classic - Geo Series [1]

○ **ANDORRA**	Andorra	○ **MOJAVE**	Mojave
○ **ANTARCTICA**	Antarctica	○ **MYKONOS**	Mykonos
○ **ARUBA**	Aruba	○ **PATAGONIA**	Patagonia
○ **BLACK-SEA**	Black Sea	○ **RAINIER**	Rainier
○ **DENALI**	Denali	○ **SIENA**	Siena
○ **GLACIER**	Glacier Bay	○ **SIERRA**	Sierra Madre
○ **KALAHARI**	Kalahari	○ **YUKON**	Yukon

Evero Classic - Pearl Series [1] *(available at an additional charge)*

○ **AKOYA**	Akoya	○ **BLACK-MOON**	Black Moon

Evero Matte - Mason Series [2]

○ **BEDROCK**	Bedrock	○ **LUNAR GRAY**	Lunar Gray
○ **CINDER**	Cinder	○ **MESA WHITE**	Mesa White
○ **DESERT CLAY**	Desert Clay	○ **SANDBAR**	Sandbar
○ **LIMESTONE**	Limestone		

WashBar Type (select one)

○ **WB1** WashBar WB1 w/Touch-Free Time of Flight Sensor Activation

○ **WB2** WashBar WB2 w/Touch-Free Time of Flight Sensor Activation

○ **WB1-DO** WashBar WB1 Drilling Only

○ **WB2-DO** WashBar WB2 Drilling Only

Water Supply Type (select one)

○ **T** Navigator® Thermostatic Mixing Assembly (Supply Hoses and Shut-Offs included)

○ **L** Single Tempered Line Assembly (Supply Hoses and Shut-Offs included)

Flow Control Type (select one)

○ **3** 0.35 gpm (1.30 Lpm) PCA Silicone Tip, Multiple Individual Laminar Flow Streams

○ **5** 0.50 gpm (1.90 Lpm) PCA Silicone Tip, Multiple Individual Laminar Flow Streams

○ **NONE** No Flow Control [3]

WashBar Finish Type [5] (select one)

○ **PC** Polished Chrome

○ **BB** Brushed Black Stainless

○ **BS** Brushed Stainless

○ **BZ** Brushed Bronze

○ **BR** Brushed Brass

○ **BN** Brushed Nickel

○ **NONE** No WashBar Finish [3]

Soap Type (select one)

○ **F** Foam Soap Dispenser

○ **L** Liquid Soap Dispenser

○ **NONE** No Soap Type [3]

Soap Fill System (select one)

○ **M** Top Fill Multi-Feed (Includes 6-SOAP-MFT Multi-Feed Soap Tank Assembly with 1.3 gal (166.5 oz) container)

○ **BI** Below Fill (Individual, includes 1 gallon (3.72 L) container)

Hand Dryer Type (select one)

○ **HD2** Brushless 120V, 50/60Hz, 8.6A

○ **NONE** No Hand Dryer [3]

Power Supply (select one)

○ **AC** AC Power

NOTE: The Top Fill Multi-Feed power harness is included when Soap Fill System type M is selected.

Trench Drain Cap Type (select one)

○ **DR1** Stainless Steel Trench Drain Cap [4]

○ **DR2** Slotted Stainless Steel Trench Drain Cap w/Vandal Screws [4]

Access Panel Type (select one)

○ **STAIN** Swing Down Stainless Steel

○ **STAIN-E** Swing Down Stainless Steel w/Enclosed Bottom

○ **PWB** Swing Down Matte Black Powder-Coated Stainless Steel

○ **PWB-E** Swing Down Matte Black Powder-Coated Stainless Steel w/Enclosed Bottom

Access Panel Fastener Type (select one)

○ **TS** Thumb Screw

○ **VS** Vandal Resistant Screw

○ **CL** Cam Lock

Waste Assembly Type (select one)

○ **S-POLY** Single Polypropylene P-Trap

○ **S-CHROME** Single Chrome-Plated P-Trap

[1] Available with Material Type EC only.
[2] Available with Material Type EM only.
[3] Available only with WB1-DO or WB2-DO
[4] Available in stainless steel finish only.
[5] WashBar finish will match Top Fill (M) port finish.

This information is subject to change without notice.

© 2024 Bradley
P.O. Box 309, Menomonee Falls, WI 53052-0309
800 BRADLEY (800 272 3539) +1 262 251 6000
bradleycorp.com

Dimensions for LVQD2 Wash Basin – WB1 (mm)

Top View

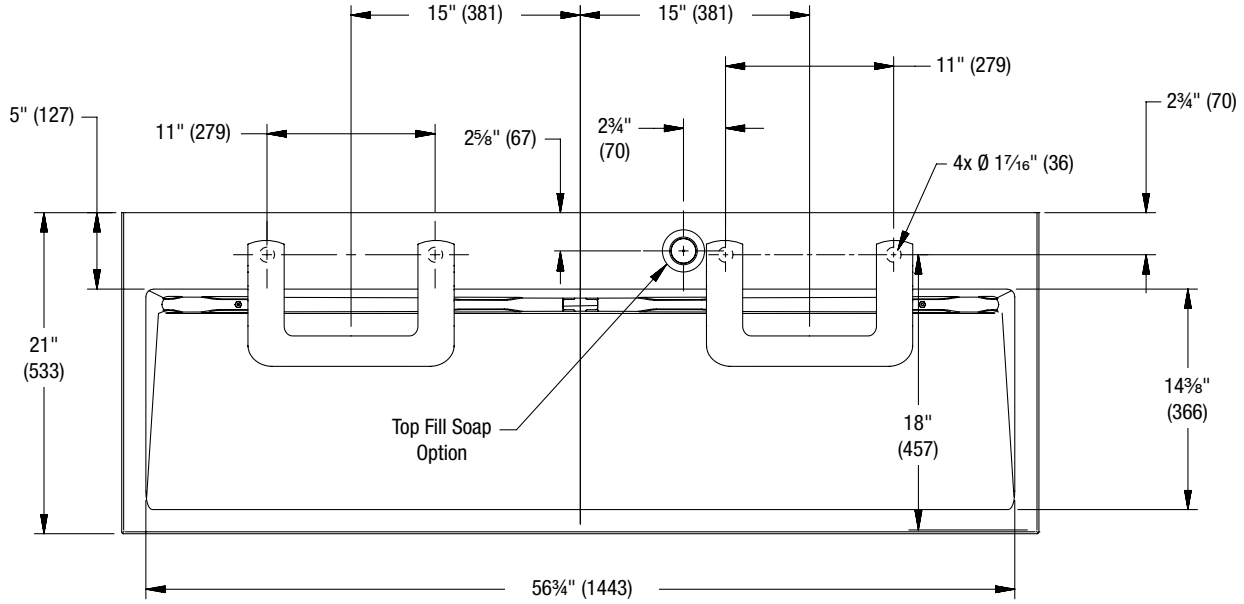

Front View

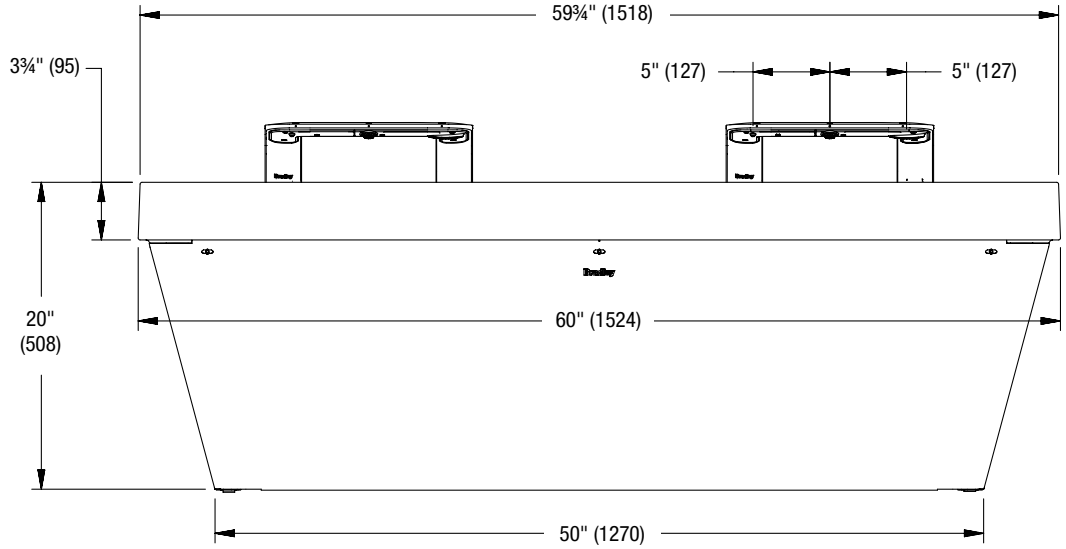

© 2024 Bradley
P.O. Box 309, Menomonee Falls, WI 53052-0309
800 BRADLEY (800 272 3539) +1 262 251 6000
bradleycorp.com
This information is subject to change without notice.

Dimensions for LVQD1 Wash Basin – WB1

(mm)

Side View

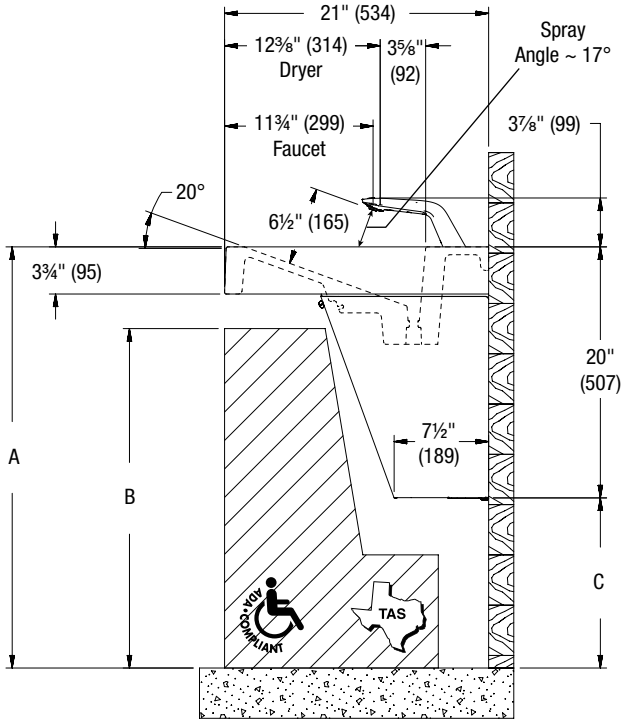

Side View - Canadian Standards

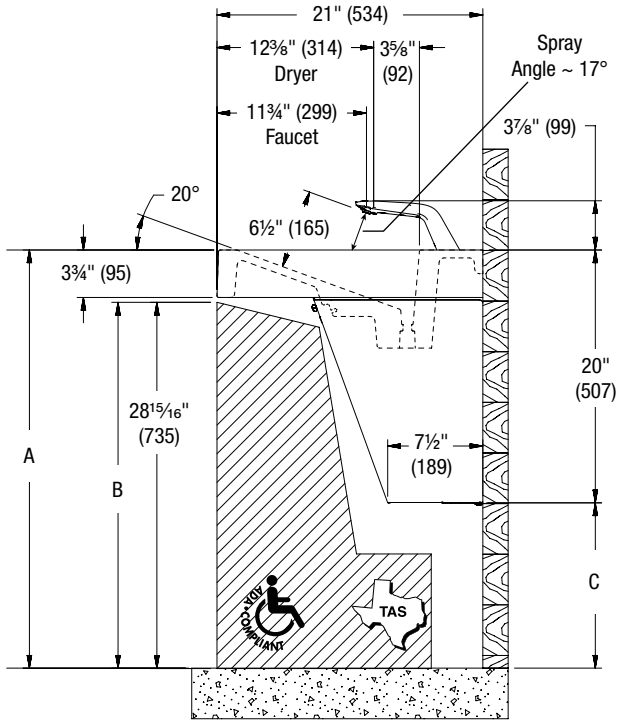

	ADA/TAS Standard Height	ADA/TAS Juvenile Height (Children 6-12 years)
Dim A	33½" (851)	30½" (775)
Dim B	27" (686)	24" (610)
Dim C	13½" (343)	10½" (267)

	CSA Standard Height
Dim A	33½" (851)
Dim B	29 29/32" (760)
Dim C	13½" (536)

This information is subject to change without notice.

© 2024 Bradley
P.O. Box 309, Menomonee Falls, WI 53052-0309
800 BRADLEY (800 272 3539) +1 262 251 6000
bradleycorp.com

Dimensions for LVQD1 Wash Basin – WB2 (mm)

Top View

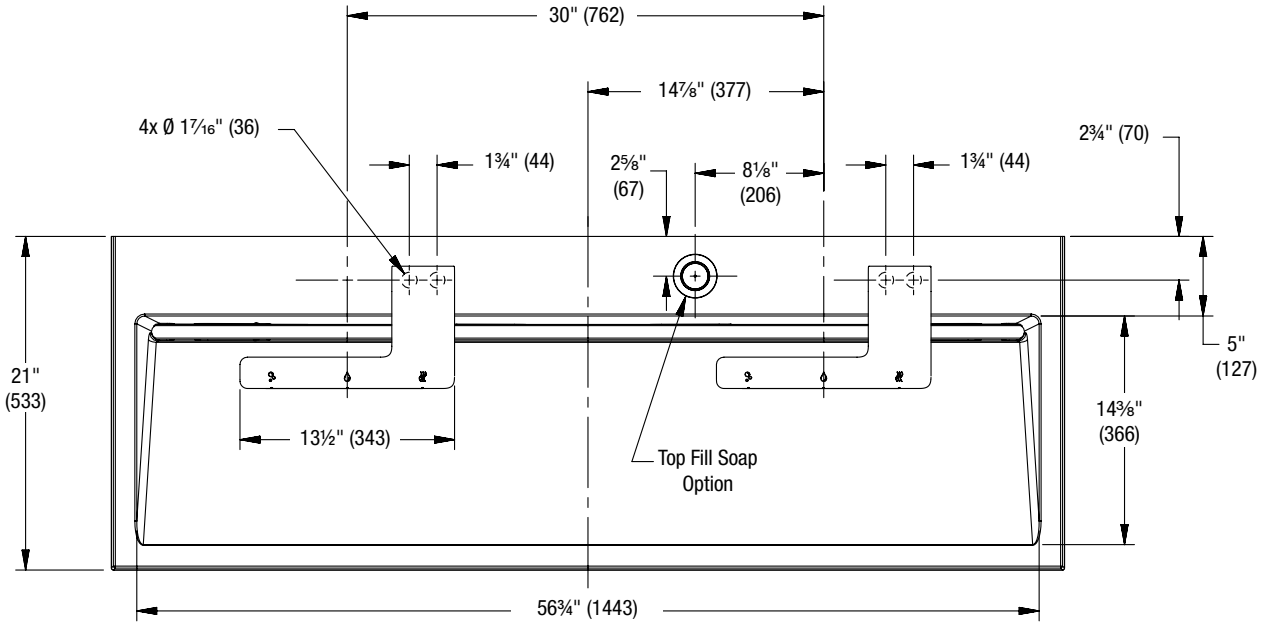

Front View

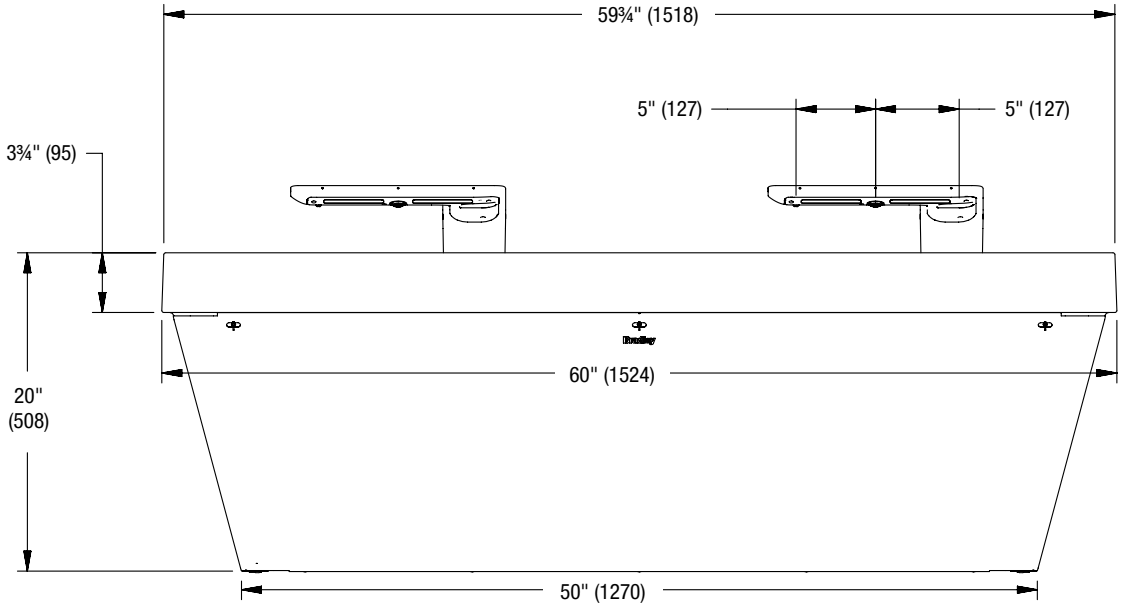

© 2024 Bradley
P.O. Box 309, Menomonee Falls, WI 53052-0309
800 BRADLEY (800 272 3539) +1 262 251 6000
bradleycorp.com
This information is subject to change without notice.

Dimensions for LVQD1 Wash Basin – WB2

(mm)

Side View

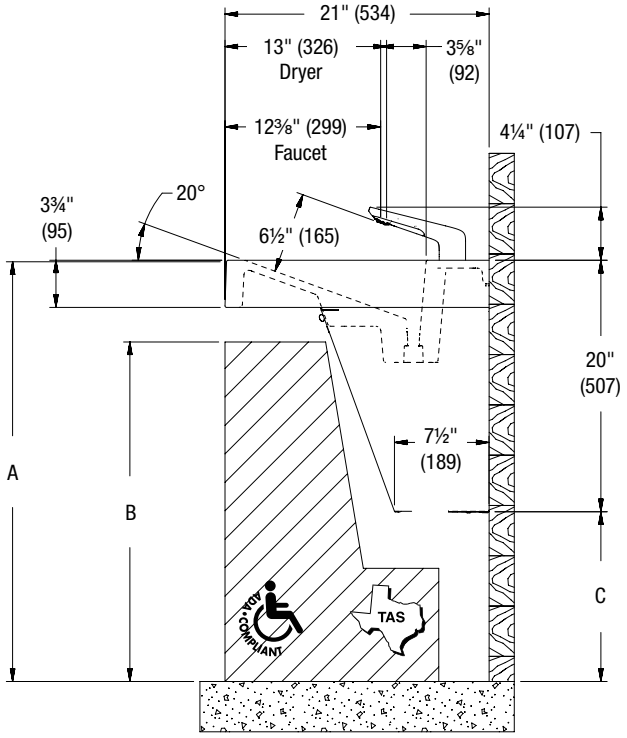

Side View - Canadian Standards

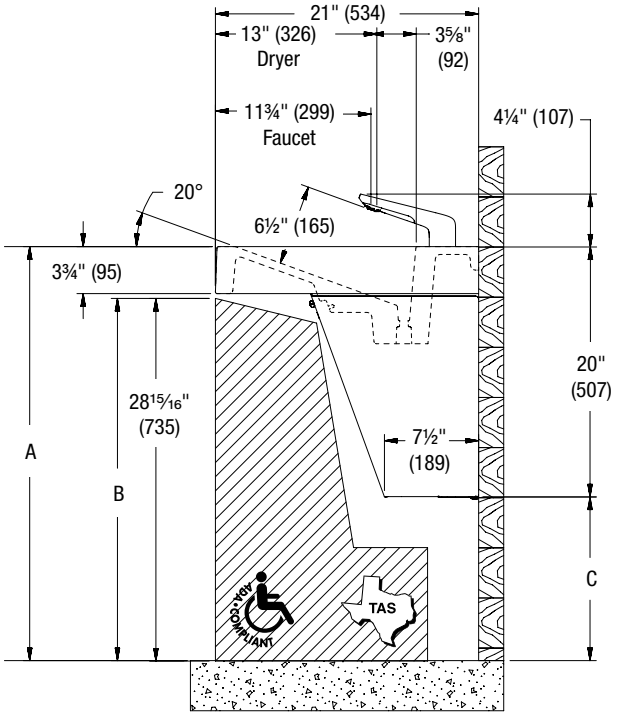

	ADA/TAS Standard Height	ADA/TAS Juvenile Height (Children 6-12 years)
Dim A	33⅖" (848)	30½" (775)
Dim B	27" (686)	24" (610)
Dim C	13½" (343)	10½" (267)

	CSA Standard Height
Dim A	33½" (851)
Dim B	29 29/32" (760)
Dim C	13½" (536)

This information is subject to change without notice.

© 2024 Bradley
P.O. Box 309, Menomonee Falls, WI 53052-0309
800 BRADLEY (800 272 3539) +1 262 251 6000
bradleycorp.com

Structural Rough-Ins for Bowl & Access Panel (mm)

WARNING Ensure bowl is completely seated in the wall bracket and securely fastened to the wall at point A.

Bradley recommends structural backing that is compliant with local building codes be placed behind the basin. Backing must support the wall bracket at points A and B.

Mounting for Standard ADA and TAS height shown.

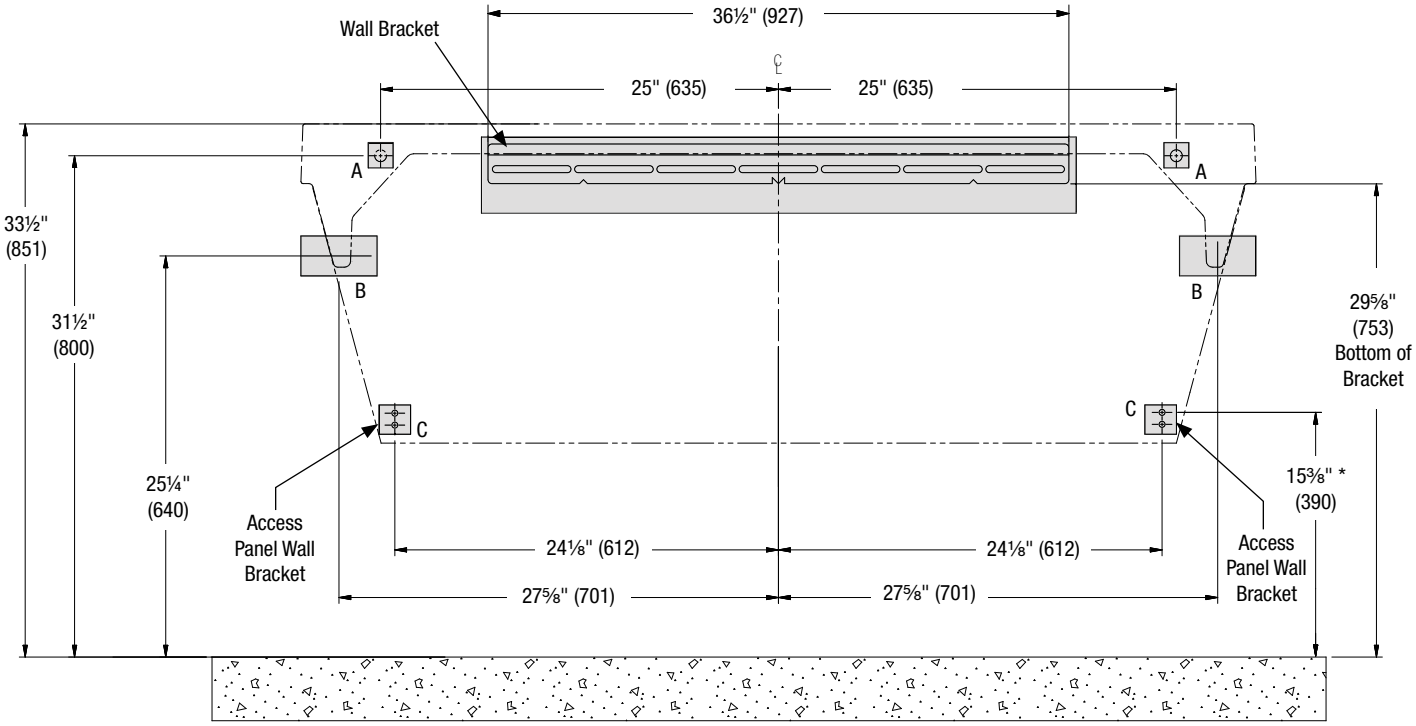

CODE	DESCRIPTION	QTY.
A	Install (1) 3/8" wall anchor with a minimum pull-out force of 1,000 lb per local codes at locations shown.	2
B	Provide structural backing compliant with local building codes.	2
C	Install wall anchor with a minimum pull-out force of 100 lb per local codes at locations shown.	4

* Measured from center of top slot on access panel wall bracket

RIM HEIGHT	VERTICAL HEIGHT ADJUSTMENTS	FIXTURE STYLE
33½"	No Adjustment	Standard Height ADA, TAS, and CSA
30½"	Subtract 3"	Juvenile ADA, and TAS

This information is subject to change without notice.

© 2024 Bradley
P.O. Box 309, Menomonee Falls, WI 53052-0309
800 BRADLEY (800 272 3539) +1 262 251 6000
bradleycorp.com

Plumbing and Electrical Rough-Ins for LVQD2 Wash Basin (mm)

Mounting for Standard ADA and TAS height shown.

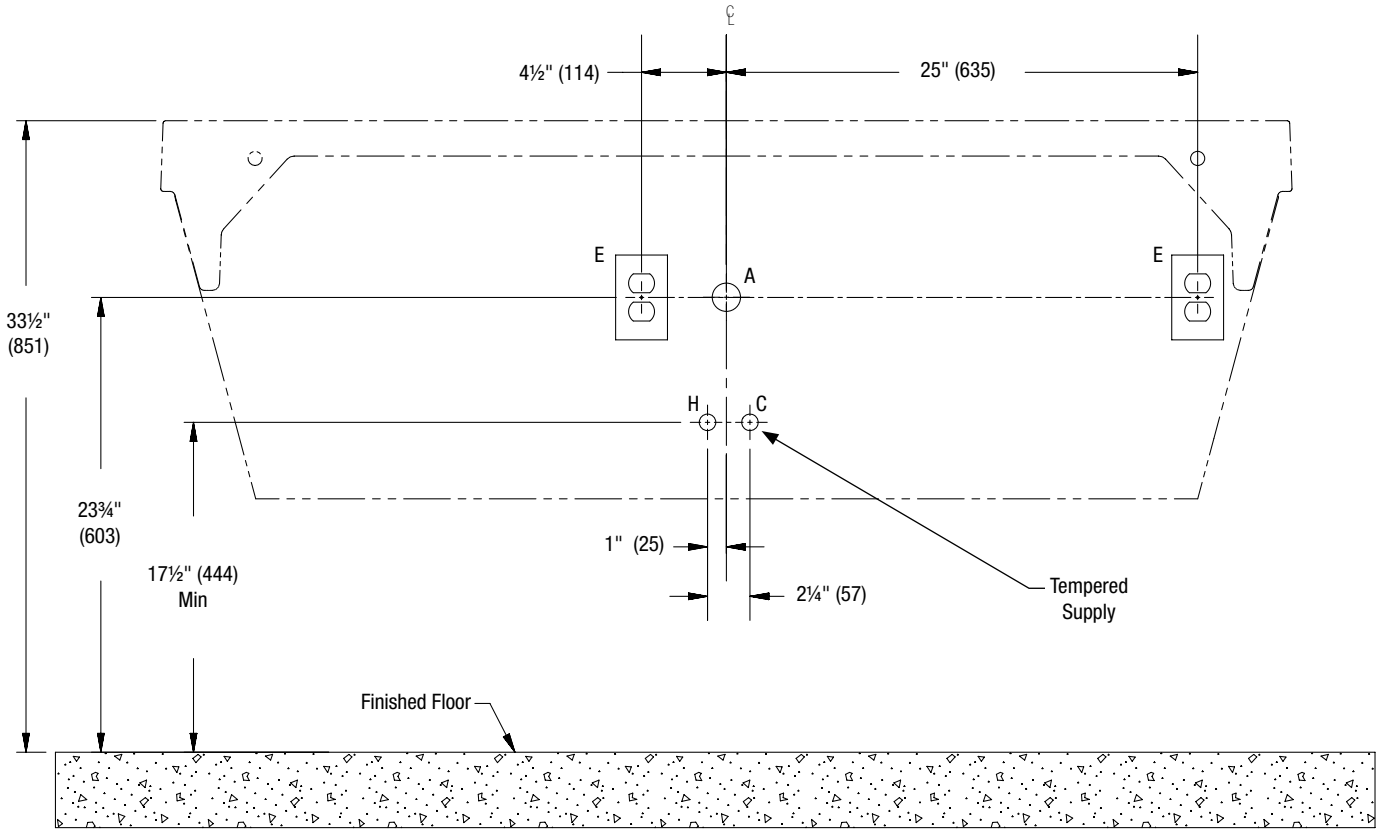

CODE	DESCRIPTION	QTY.
A	1½" NPT Drain, Stub-out 2" from wall	1
H,C	½" Nominal (⅝" O.D. Comp.) Hot/Cold supplies, Stub-out 2" from wall	1
E	A dedicated NEMA 5-15R Receptacle, 125V GFCI must be provided, which is properly grounded and no more than 4 ft from the installation of the dryer assembly.*	2

*If no GFCI outlet is provided, contact a licensed electrician to ensure proper electrical connections in accordance with local building codes. Troubleshooting and internal maintenance must be performed by qualified service personnel.

© 2024 Bradley
P.O. Box 309, Menomonee Falls, WI 53052-0309
800 BRADLEY (800 272 3539) +1 262 251 6000
bradleycorp.com
This information is subject to change without notice.

Structural Rough-Ins for Top Fill Soap (mm)

WARNING Ensure bowl is completely seated in the wall bracket and securely fastened to the wall at point A.

Points T and T2 require sufficient backing compliant with local building codes.

Mounting for Standard ADA and TAS height shown.

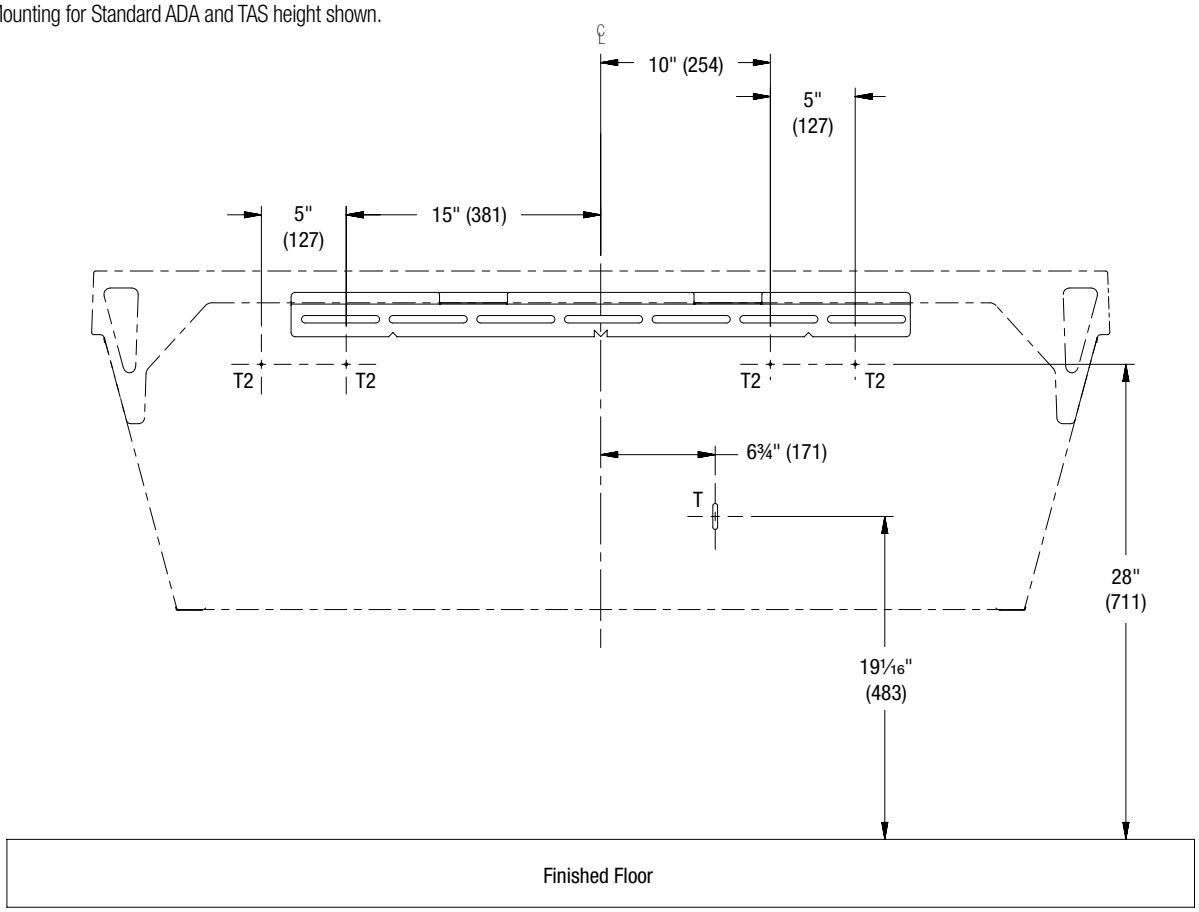

CODE	DESCRIPTION	QTY.
T	#10 Wall Anchors for Top Fill Soap Tank Mount	1
T2	#10 Wall Anchors for Top Fill Soap Control Box Bracket	4

RIM HEIGHT	VERTICAL HEIGHT ADJUSTMENTS	FIXTURE STYLE
33½"	No Adjustment	Standard Height ADA, TAS, and CSA
30½"	Subtract 3"	Juvenile ADA and TAS

© 2024 Bradley
P.O. Box 309, Menomonee Falls, WI 53052-0309
800 BRADLEY (800 272 3539) +1 262 251 6000
bradleycorp.com
This information is subject to change without notice.

Structural Rough-Ins for Bottom Fill Soap (mm)

WARNING Ensure bowl is completely seated in the wall bracket and securely fastened to the wall at point A.

Points S and S1 (highlighted in gray) require sufficient backing compliant with local building codes.

Mounting for Standard ADA and TAS height shown.

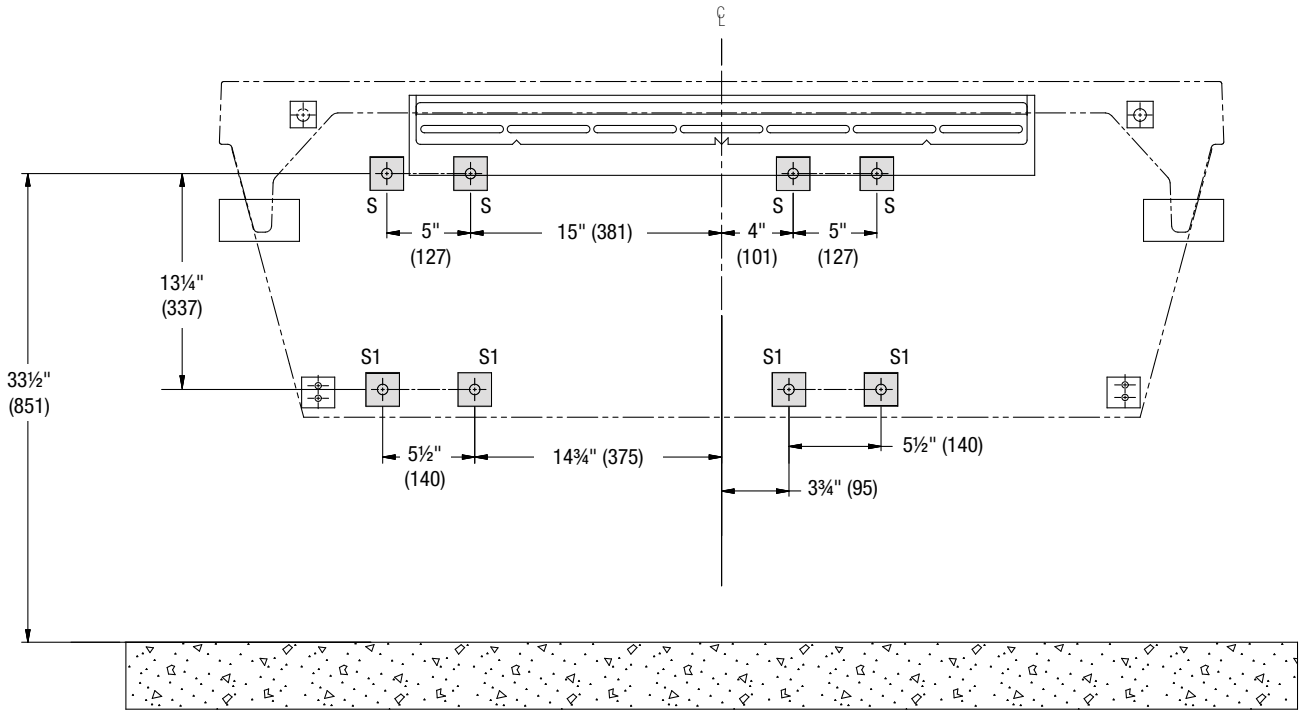

CODE	DESCRIPTION	QTY.
S*	#10 Wall Anchors for Soap Control Box Bracket	4
S1	#10 Wall Anchors for Soap Tank Bracket (100 lb pull out force)	4

* Measured from center of top slot on access panel wall bracket

RIM HEIGHT	VERTICAL HEIGHT ADJUSTMENTS	FIXTURE STYLE
33½"	No Adjustment	Standard Height ADA, TAS, and CSA
30½"	Subtract 3"	Juvenile ADA and TAS

© 2024 Bradley
P.O. Box 309, Menomonee Falls, WI 53052-0309
800 BRADLEY (800 272 3539) +1 262 251 6000
bradleycorp.com